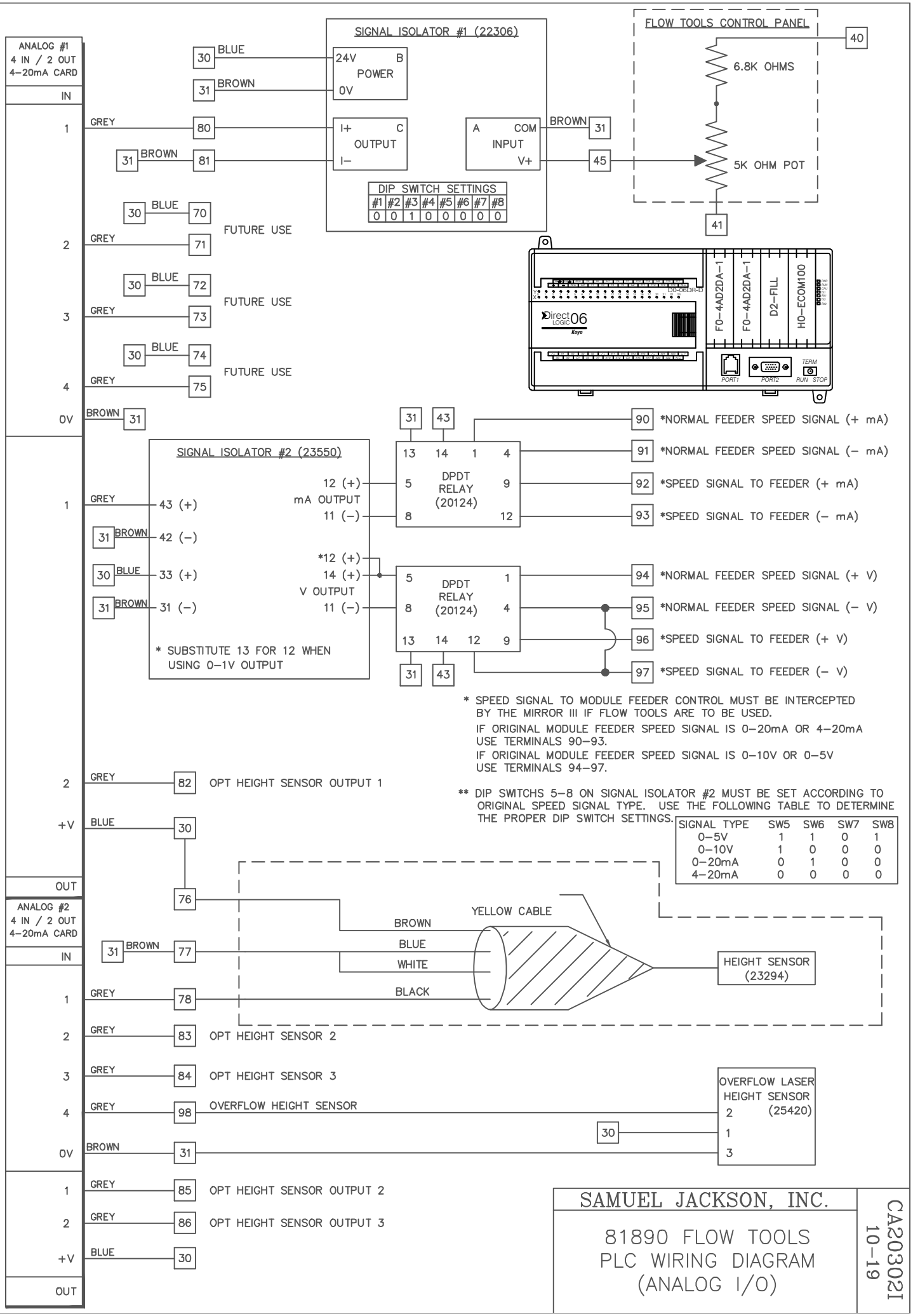

* SPEED SIGNAL TO MODULE FEEDER CONTROL MUST BE INTERCEPTED BY THE MIRROR III IF FLOW TOOLS ARE TO BE USED.
IF ORIGINAL MODULE FEEDER SPEED SIGNAL IS 0–20mA OR 4–20mA USE TERMINALS 90–93.
IF ORIGINAL MODULE FEEDER SPEED SIGNAL IS 0–10V OR 0–5V USE TERMINALS 94–97.

** DIP SWITCHS 5–8 ON SIGNAL ISOLATOR #2 MUST BE SET ACCORDING TO ORIGINAL SPEED SIGNAL TYPE. USE THE FOLLOWING TABLE TO DETERMINE THE PROPER DIP SWITCH SETTINGS.

SIGNAL TYPE	SW5	SW6	SW7	SW8
0–5V	1	1	0	1
0–10V	1	0	0	0
0–20mA	0	1	0	0
4–20mA	0	0	0	0

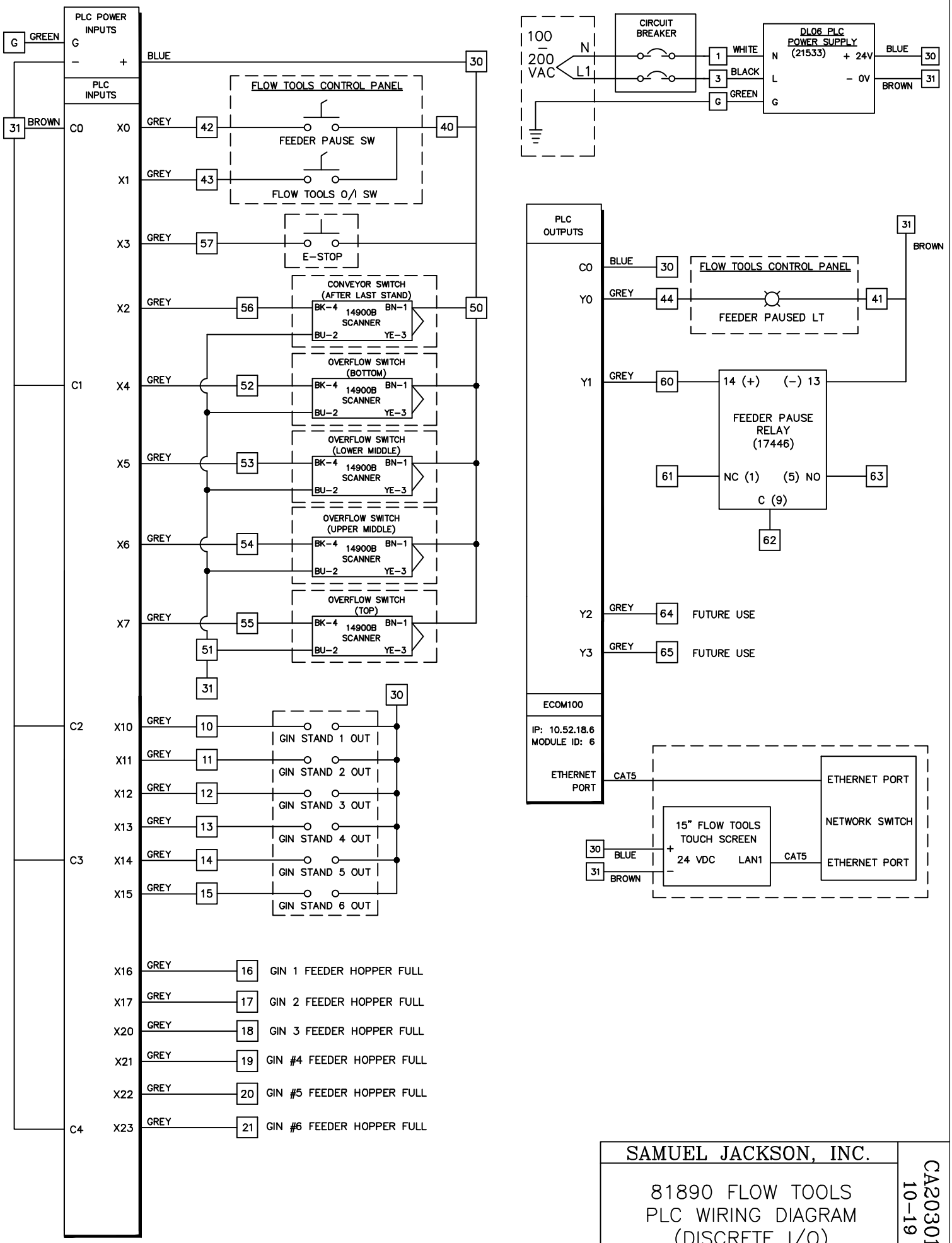

SAMUEL JACKSON, INC.

81890 FLOW TOOLS
PLC WIRING DIAGRAM
(DISCRETE I/O)

CA20301I
10-19

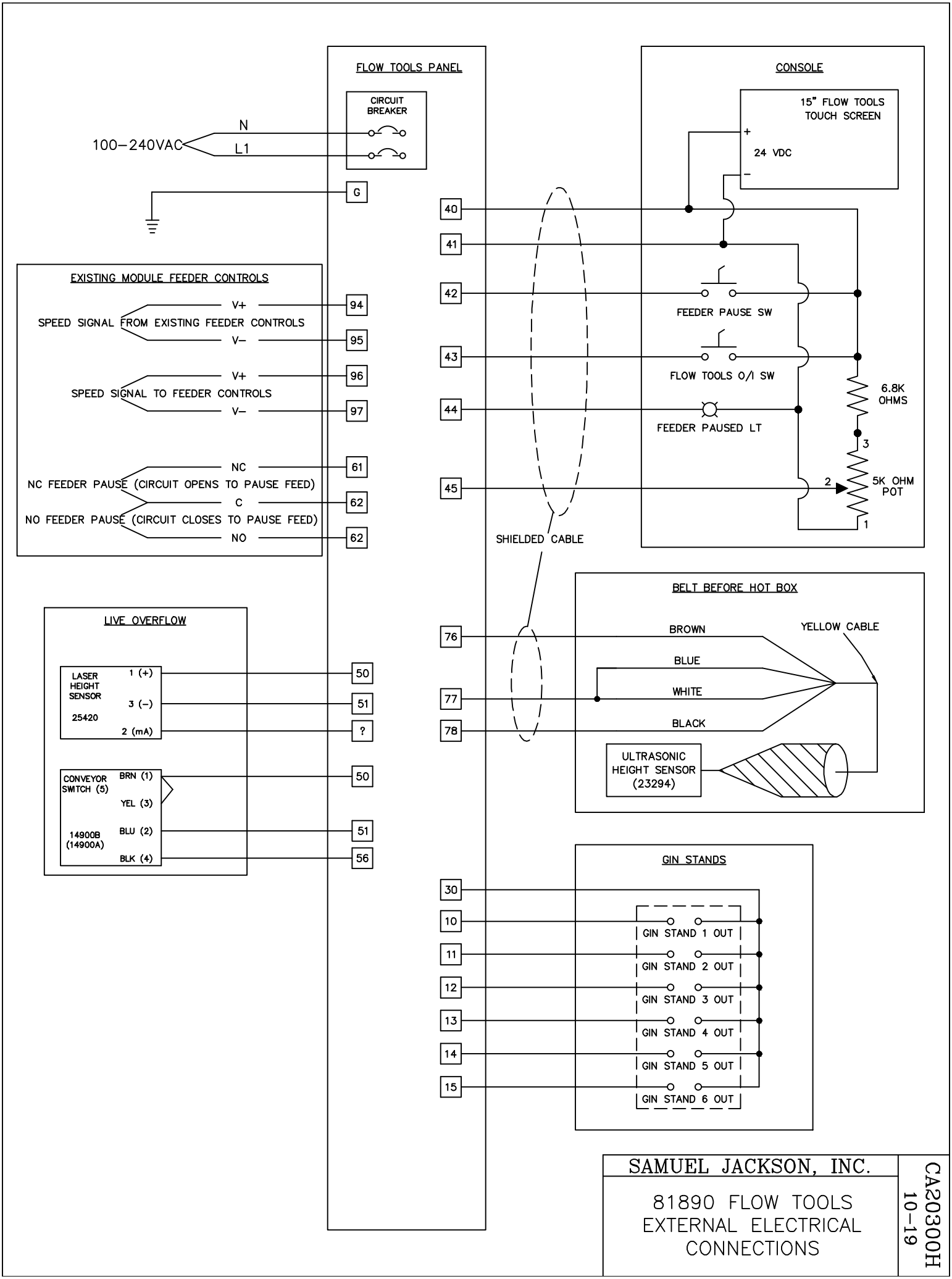
FLOW TOOLS PANEL
CIRCUIT BREAKER
100–240VAC
N
L1
G
CONSOLE
15" FLOW TOOLS TOUCH SCREEN
+
24 VDC
–
40
41
42
43
44
45
FEEDER PAUSE SW
FLOW TOOLS O/I SW
FEEDER PAUSED LT
6.8K OHMS
3
2
5K OHM POT
1
SHIELDED CABLE
EXISTING MODULE FEEDER CONTROLS
SPEED SIGNAL FROM EXISTING FEEDER CONTROLS
V+
V–
94
95
SPEED SIGNAL TO FEEDER CONTROLS
V+
V–
96
97
NC FEEDER PAUSE (CIRCUIT OPENS TO PAUSE FEED)
NC
61
NO FEEDER PAUSE (CIRCUIT CLOSES TO PAUSE FEED)
C
62
NO
62
LIVE OVERFLOW
LASER HEIGHT SENSOR
25420
1 (+)
3 (–)
2 (mA)
50
51
?
CONVEYOR SWITCH (5)
14900B (14900A)
BRN (1)
YEL (3)
BLU (2)
BLK (4)
50
51
56
BELT BEFORE HOT BOX
76
77
78
BROWN
BLUE
WHITE
BLACK
YELLOW CABLE
ULTRASONIC HEIGHT SENSOR (23294)
GIN STANDS
30
10
11
12
13
14
15
GIN STAND 1 OUT
GIN STAND 2 OUT
GIN STAND 3 OUT
GIN STAND 4 OUT
GIN STAND 5 OUT
GIN STAND 6 OUT
SAMUEL JACKSON, INC.
81890 FLOW TOOLS EXTERNAL ELECTRICAL CONNECTIONS
CA20300H
10–19