SERVICE MANUAL

HG-16-1111D

16 M BTU/HR

GAS-FIRED HEATER

SAMUEL JACKSON

DRYAIRE HEATER

We appreciate your business and hope you enjoy your Samuel Jackson Gas-Fired Heater

This manual contains information on the installation, startup, and operation of your heater. Included is information on:

- Electrical installation.
- Gas piping and supply.
- Heater and Control Cabinet dimensions.
- Maintenance and troubleshooting.

When taking delivery of your new Gas-Fired Heater, take a moment to familiarize yourself with the location of the less obvious items in the shipment. This service manual is normally shipped in the box of control parts. Included in the box of control parts are the thermocouples, thermocouple wire, glass windows, air flow tubes, spark plug and flame rod wire, and the gas inlet valve and purge assembly for the control cabinet. The remote temperature control assembly is normally shipped in a separate box.

We suggest that you check the contents of these two boxes and then store them in a safe place until installation time. This will help prevent some of the items from being misplaced or being used for other jobs. Heater installation will then go smoothly with no delays waiting or looking for missing parts.

This manual gives general information on the location of thermocouples and optional moisture sensing equipment and the temperature control logic. If the heater is part of a Samuel Jackson Fountain Drying System, more detailed information will be shipped to you under separate cover specifically for your system.

IS STARTUP ASSISTANCE PROVIDED?

Depending upon your location, a startup and inspection service may be provided with your new heater, free of charge, by Samuel Jackson, Inc. Please contact us to make arrangements or for questions.

In the future when you require service, technical support or parts, contact us by phone or fax. Our engineers and service people are available to assist you in obtaining the best performance from your Samuel Jackson, Inc. products.

Again, thanks for choosing a Samuel Jackson Gas-Fired Heater.

SAMUEL JACKSON, INCORPORATED
MAIL: P.O. BOX 16587 LUBBOCK, TEXAS 79490
COURIER: 3900 UPLAND AVENUE LUBBOCK, TEXAS 79407
TELEPHONE 806-795-5218 OR 800-862-9966
TELEFAX 806-795-8240

A NOTE CONCERNING THE HG-16-1111D HEATER

The HG-16-1111D gas-fired 16-million Btu/hr heater is comprised of two model HG-8-1111D heaters. For simplicity of operation, the temperature controller is identical to the standard 17400B remote controls provided with all Samuel Jackson gas-fired heaters.

Throughout this manual, the reader will find references to the HG-8-1111D heater. The PLC and combusion control functions are identical and therefore can be used without modification. The burner bodies and burner heads are also identical.

Special information pertaining to the HG-16 is included in this manual. The assembly instructions for the screen support, wiring diagram for the remote temperature control, and central PLC interface wiring diagrams are included.

TIPS

From the operator's viewpoint, there is one tip that may be used to good advantage with the HG-16-1111D. If the standard remote control is used to turn the heater on and off, both burners will ignite or shutdown simulataneously from the operator's command. This will provide a turndown ratio of 20:1 which is standard with all Samuel Jackson heaters.

If conditions are relatively dry, a 40:1 turndown ratio may be obtained by turning only one heater on. This is accomplished by opening the upper cabinet of one heater and turning it on with the START-STOP selector switch found on the diagnostic panel. The temperature controls will work in their normal manner but will be controlling only the single burner body, providing an effective turndown of 40:1. This may be desirable when only a small amount of heat is desired to help open up dry cotton. The operator should be aware that the second heater must be turned on in order to provide maximum operating temperature to the drying system.

SAFETY FEATURES
OF
SAMUEL JACKSON GAS FIRED HEATERS

Many of the traditional safety features designed into drying heaters can be tampered with and circumvented if the operating personnel are desperate to maintain production. An important, but hidden, safety feature in all Samuel Jackson heaters is their dependable performance. Each heater is completely assembled in the factory and tested before shipment. A factory representative performs startup of the heater in the field to insure trouble-free performance and customer satisfaction. Safety features which are not ordinarily used on drying heaters for the cotton industry are outlined below:

- One design aspect aimed at performance, but contributing to safety, is the achievement of high flame electrode current. This prevents nuisance shutdowns by the flame safeguard device which can drive operators to desperation.

- A static pressure switch is often used on older heaters to infer that air is moving through the dryer. If a chokeup occurs, static pressure is still present and the burner continues to operate. This can cause a fire. All Samuel Jackson heaters use an air flow switch which measures the difference in pressure sensed by orifices pointing upstream and downstream. In order to give immediate burner shutoff, and serve as a safety backup for the air flow switch, we include a fan interlock device for each burner.

- The combustion control system performs six air flow tests and interlocks, including tests for a jammed or jumpered air flow switch, presence of electrical fan interlocks, and warnings of impending chokages in the air stream.

- To prevent any debris from jamming a gas valve in the open position or causing it to leak when closed, we use two internationally approved gas shutoff valves in series. The burner's microprocessor control system checks these valves for leaks following each shutdown of the burner. If the valves fail a test, a diagnostic code indicates which valve was at fault. If the valves pass the test, an alternate test is used following the next shutdown. This routine is repeated for the life of the heater. The combustion control computer also checks for other safety and performance problems and notifies the operator with a diagnostic code number.

- When the burner flame goes out during operation on older heaters, it is customary for the flame safeguard relay to fire the sparkplug immediately in an attempt to reignite. If air flow has been choked enough to produce an explosive mixture, this can be serious. If our burner should flameout, it will first close all gas valves, then wait for air to purge the drying system. It then proceeds to restart the burner, observing all safety precautions, including checking for flame relay problems.

- Checking the incoming gas pressure, operation of the gas regulator, and electrical interference in the flame safety system are additional diagnostics that are standard with Samuel Jackson heaters.

HEATER OPERATION

HOW DO I TURN IT ON?

The heater is turned on by momentarily turning the START-STOP selector switch to the right and releasing it. This can be done either at the remote station or at the "LOCAL PANEL" in the heater's upper cabinet. When initially starting the heater, we recommend attempting to start it at the local panel so that any ALARM/ERROR codes can be observed for troubleshooting.

After the switch is turned and released, the STATUS light should come on indicating that the combustion control computer is thinking. After approximately 30 seconds, the burner will attempt ignition if no problems are encountered. If ignition fails, the heater controls will automatically make two more attempts following appropriate air purge delays.

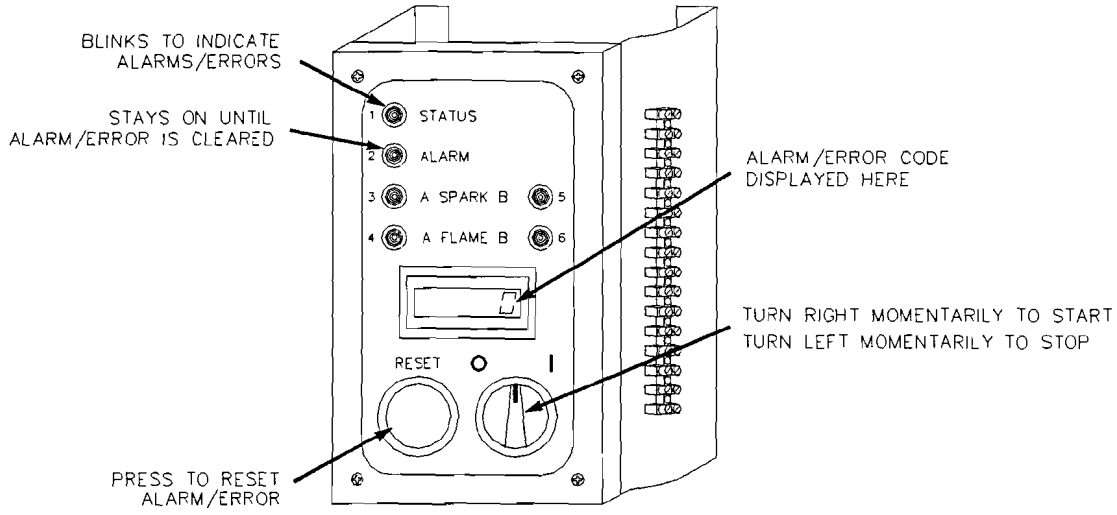

Figure 1 - LOCAL PANEL

14-3567.1

WHY IS THERE A DELAY AFTER I TURN IT ON?

When the STATUS light comes on, the combustion control computer begins opening and closing valves to test the integrity of various safety switches located in the heater's control cabinet. If it finds a problem with one of these devices, it alerts the operator with an ALARM/ERROR code that corresponds to the problem. These diagnostics are performed every time the heater is started and continue during operation until approximately 15 minutes <u>after</u> the heater is turned off.

TIPS

Always leave power on the heater during gin season. There is a permanent memory in the combustion control computer that remembers when you turned off the power and did not permit the computer to check the gas valves. It will result in ERROR 29 after 6 shutdowns with no leak check.

To prevent lightning damage to the surge protector and controls in the off season, it is a good idea to turn power off to the control cabinet until it is needed again.

ALARMS and ERRORS are described more fully later in this manual. They are also outlined briefly on a decal in the burner cabinet. ALARMS will warn the operator for 5 minutes and ERRORS will cause an immediate shutdown.

The STATUS light at the remote control station will blink once every two seconds to indicate an ALARM and once per second to indicate an ERROR.

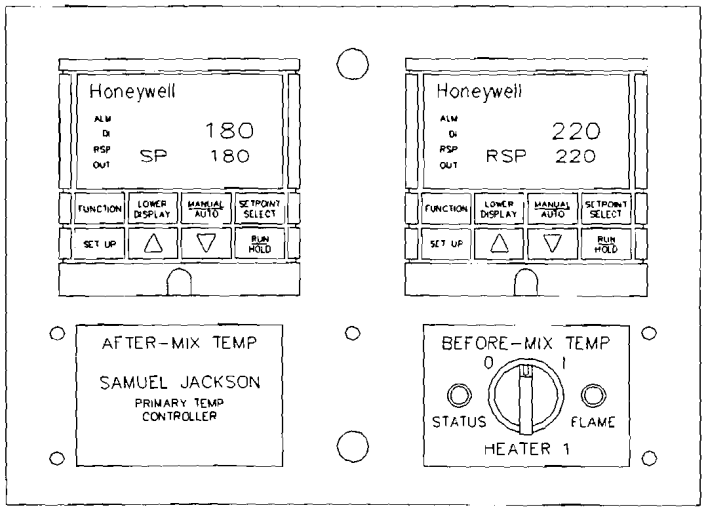

Figure 2 - 17400B TEMPERATURE CONTROL 14-3567.2

HOW DO I SET THE TEMPERATURE?

The temperature is set using the UP ARROW and DOWN ARROW buttons on the left digital temperature controller on the 17400B Temperature Control located at the remote control station. The left controller is called the PRIMARY TEMP CONTROLLER. Flame must be established at the burner before the controller comes on and the temperature can be changed. The last temperature set is remembered by the controller.

As the temperature is changed on the left controller, this action will cause the HIGH LIMIT CONTROLLER (on the right) to respond at the same time. The HIGH LIMIT CONTROLLER will make sure that the burner operates within a preset temperature range that is safe for cotton fiber. By observing the difference in measured temperatures between the two controllers, it is possible to estimate the wetness of the incoming cotton, as they will move farther apart as the cotton gets wetter.

There are two temperatures displayed on each controller at all times during burner operation. The bottom number is the desired temperature. It is called the setpoint temperature (SP). The top number is the measured temperature. It is called the process variable (PV).

Referring to Figure 2, note that both of the controllers have arrow buttons. In addition, both controllers have an additional button marked SETPOINT SELECT.

A bright rectangle will appear on the left of the control display indicating when the controller is communicating with another controller and is ignoring the arrow buttons. This is the normal operating mode for the high limit controller.

To bypass the modulating high limit setting, press the SETPOINT SELECT button and use the arrow buttons to set the desired temperature. The letters RSP (for remote setpoint) preceding the setpoint temperature will be replaced with the letters SP when the SETPOINT SELECT button is pressed. The operation of the cutoff safety limit is preserved even when the modulating high limit setting is bypassed.

Pressing SETPOINT SELECT button again will put the controller back into RSP mode. The HIGH LIMIT CONTROLLER will automatically power up in RSP mode regardless of whether the controller was in SP or RSP mode before shutdown.

The maximum temperatures for the controllers are preset at the factory to the normal limits. Contact the factory for help in changing these limits.

WHERE DO I INSTALL THE THERMOCOUPLES?

We color code the thermocouples to help guide you in installing the right thermocouple for the job. Thermocouples with red paint on the pipe threads are for installation before the initial drying system air/cotton mix-points. These are the high limit thermocouples. We trim back the stainless sheath from the sensor bulb, exposing it to allow quick response to temperature changes. The exposed bulb should not be used in pipes with cotton flow.

Thermocouples with blue paint on the pipe threads are for installation after the cotton and air mix-points. These are the primary thermocouples. The stainless sheath is left intact over the sensor bulb to protect it from abrasion.

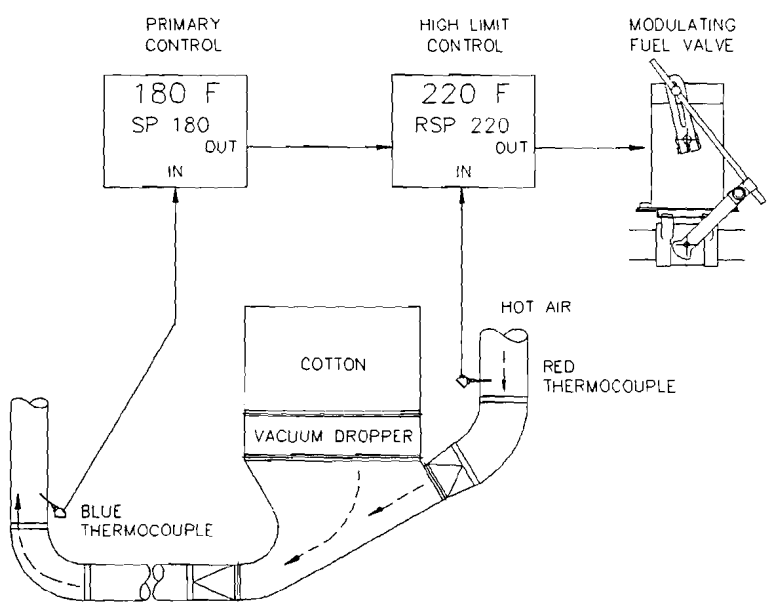

Figure 3 - BASIC TEMPERATURE CONTROL 14-3567.3

Referring to Figure 3, placing the primary thermocouple on the inner radius side after an elbow will protect it from life shortening abrasion. Angling the thermocouple 45 degrees in the direction of cotton flow will prevent cotton and trash from tagging on the thermocouple.

For Fountain Drying Systems, the primary thermocouple is placed after the Fountain's skimmer in the skimmed air. For tower drying systems, this thermocouple must be placed in the top of the tower or in the transition immediately before the tower. Due to the responsiveness of the temperature controls, placing this thermocouple farther down in the tower will cause control instability.

For heaters operating with Hot Boxes for module feeders with the cotton going to an unloading separator, place the primary thermocouple in the seed cotton pipe before the unloading separator. Call the factory for information on feed control operation when used in conjunction with a module feeder and heater.

HOW DO I USE THE OPTIONAL AUTOMATIC MOISTURE CONTROL?

With our optional automatic moisture controls, the temperature on the PRIMARY TEMP CONTROLLER is automatically adjusted based on incoming moisture content of the cotton. We call this arrangement "Feed-Forward Control".

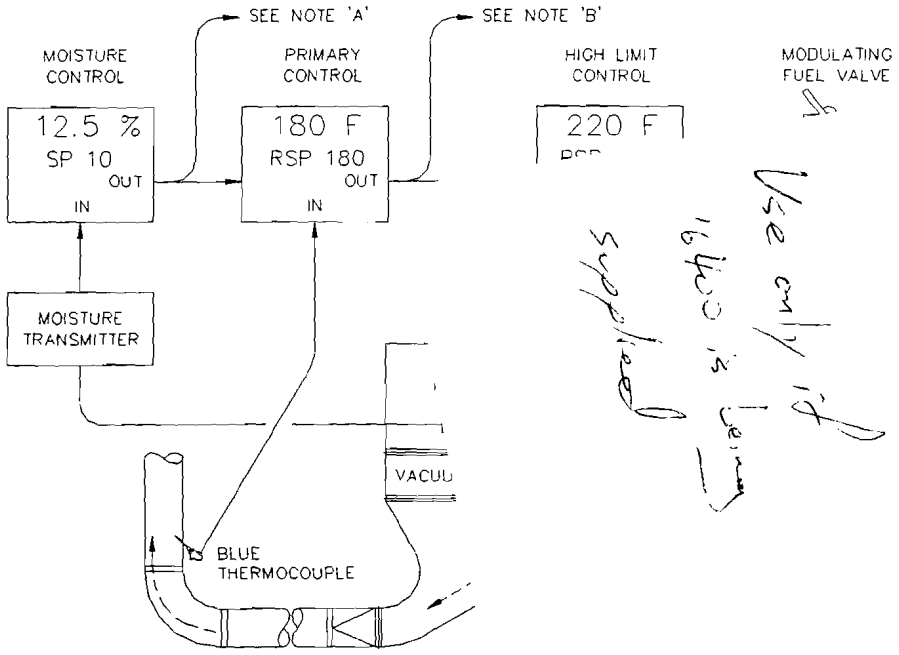

Figure 4 - BASIC FEED-FORV ... CONTROL 14-3567.4

During automatic moisture control, the PRIMARY TEMP CONTROLLER also has RSP displayed in front of the setpoint temperature indicating that it is communicating with the moisture control system. A setpoint (SP) is provided on the moisture control to allow the ginner to bias the general drying temperature level upward or downward.

Raising the SP up on the moisture control will provide lower drying temperatures, while lowering it will provide higher temperatures. A decal is provided on the face of the moisture control as a reminder of the SP logic.

To bypass the automatic moisture controls, press the SETPOINT SELECT button to make the rectangle disappear on the PRIMARY TEMP CONTROLLER and use the arrow buttons to set the desired temperature. The letters RSP (for remote setpoint) preceding the setpoint temperature will be replaced with the letters SP when the SETPOINT SELECT button is pressed. The high limit controller will still operate in this mode to protect the cotton fiber.

Figure 4 shows the feed-forward control with a moisture sensor in the storage bin of a feed control. The moisture control is adjusting the temperature of one heater that may be part of either a Fountain or tower drying system.

Other sensor arrangements are available including a floating sensor for module feeder belt conveyors. Call the factory for more information.

Notes:

A - Use this arrangement for tower drying systems where both first and second stage heater temperatures are adjusted automatically with the moisture control.

B - This arrangement is used for Fountain Drying Systems using more than one heater. One PRIMARY TEMP CONTROLLER is used for measuring the temperature after a Fountain Dryer. Its SP temperature is automatically adjusted by the moisture control as before. The one PRIMARY TEMP CONTROLLER adjusts the temperature RSP's of each of the heaters' high temperature limit controllers.

WHAT IS THE "TEST PROGRAM"?

The "Test Program" can be activated by a qualified service man to test a new installation. This program allows the service man to proceed step-by-step, through a series of tests where individual components of the heater can be calibrated and adjusted.

The test program is also performed on each new heater before it leaves the factory. It is described fully in the *TEST SEQUENCE EXPLANATION* section of the manual.

HG-16-1111D GAS-FIRED HEATER, 16-MILLION BTU/HR

STUB-UPS

NO.	DESCRIPTION	ROUTING AND NOTES
1	BURNER POWER	FROM BREAKER TO BURNERS 120 VAC, 15 A SUPPLY 1/2" COND, 2 - 14 GA WIRES (EACH)
2	BURNER TEMPERATURE	FROM BURNER CABINETS TO CONSOLE OR TEMP CONTROLS 3/4" COND, 9 - 16 GA WIRES (EACH)
3	BURNER SPARK PLUG WIRES RUN OVERHEAD	FROM BURNER CABINETS TO BURNER BODIES ONE 1" COND WITH 2 SPARK PLUG WIRES AND ONE 1/4" PLASTIC AIR FLOW TUBE (EACH).
4	BURNER FLAME ROD WIRES RUN OVERHEAD	FROM BURNER CABINETS TO BURNER BODIES ONE 1" COND WITH 3 - 14 GA WIRES AND ONE 1/4" PLASTIC AIR FLOW TUBE. (EACH)
5	THERMOCOUPLES PRIMARY (MARKED BLUE)	FROM TEMP CONTROL TO: ENTRANCE OF TOWER OR SECOND- STAGE SKIMMER AIR OUTLET OF FOUNTAIN DRYING SYSTEM.
	HIGH LIMIT (MARKED RED)	HOT AIR BEFORE MIX POINT.
		1/2" COND WITH 2 PAIR TYPE-J THERMOCOUPLE WIRE. DO NOT RUN WITH AC VOLTAGE WIRES. OKAY TO RUN WITH OTHER THERMOCOUPLE OR DC VOLTAGE WIRES.
6	GAS SUPPLY FOR BURNER	2" GAS SUPPLY LINE. (EACH) NATURAL GAS OR PROPANE. 5 TO 20 PSI, 0.3 TO 1.4 BARS. SEE DRAWING 14-1899 FOR NOMINAL RECOMMENDED PIPE SIZES.

EXTERNAL ELECTRICAL CONNECTIONS
HG-16 16 MBTU/HR GAS-FIRED HEATER WITH 17400 REMOTE CONTROL

CAT 3370
4-95

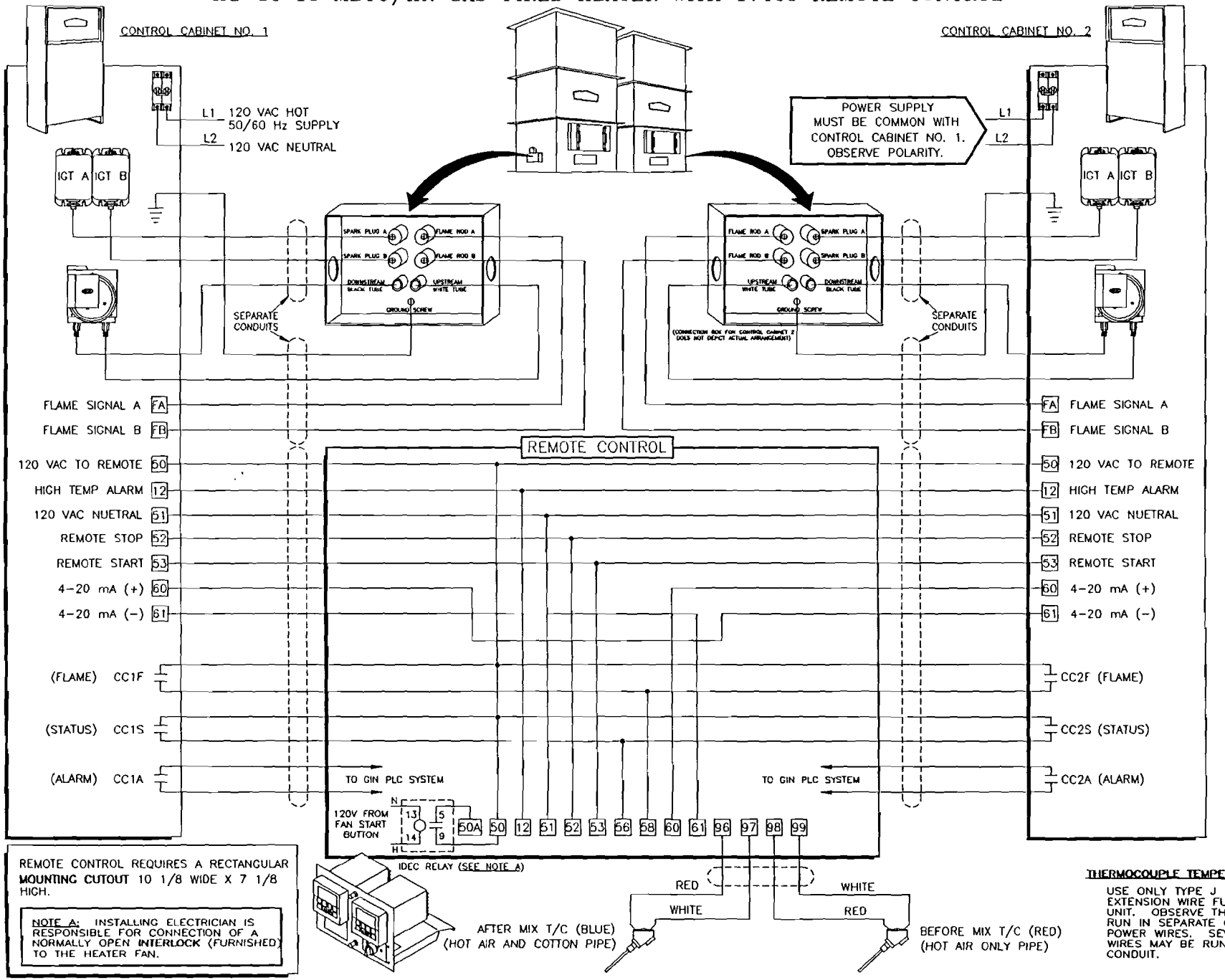

REMOTE CONTROL REQUIRES A RECTANGULAR **MOUNTING CUTOUT** 10 1/8 WIDE X 7 1/8 HIGH.

NOTE A: INSTALLING ELECTRICIAN IS RESPONSIBLE FOR CONNECTION OF A NORMALLY OPEN **INTERLOCK** (FURNISHED) TO THE HEATER FAN.

THERMOCOUPLE TEMPERATURE SENSORS

USE ONLY TYPE J THERMOCOUPLE EXTENSION WIRE FURNISHED WITH UNIT. OBSERVE THE COLOR CODE. RUN IN SEPARATE CONDUIT FROM POWER WIRES. SEVERAL T/C EXT. WIRES MAY BE RUN IN THE SAME CONDUIT.

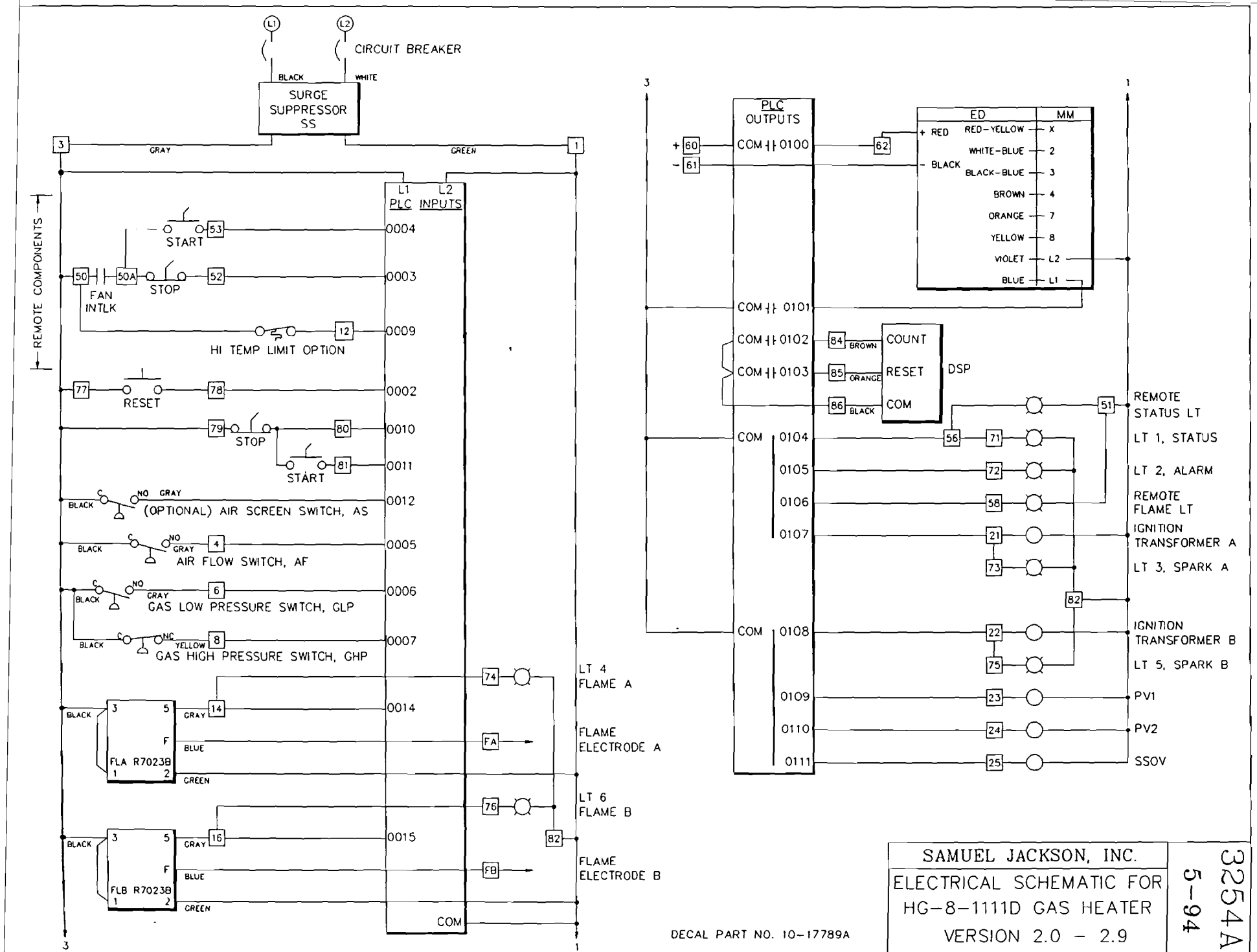

DECAL PART NO. 10-17789A

SAMUEL JACKSON, INC.

ELECTRICAL SCHEMATIC FOR HG-8-1111D GAS HEATER VERSION 2.0 - 2.9

3254A 5-94

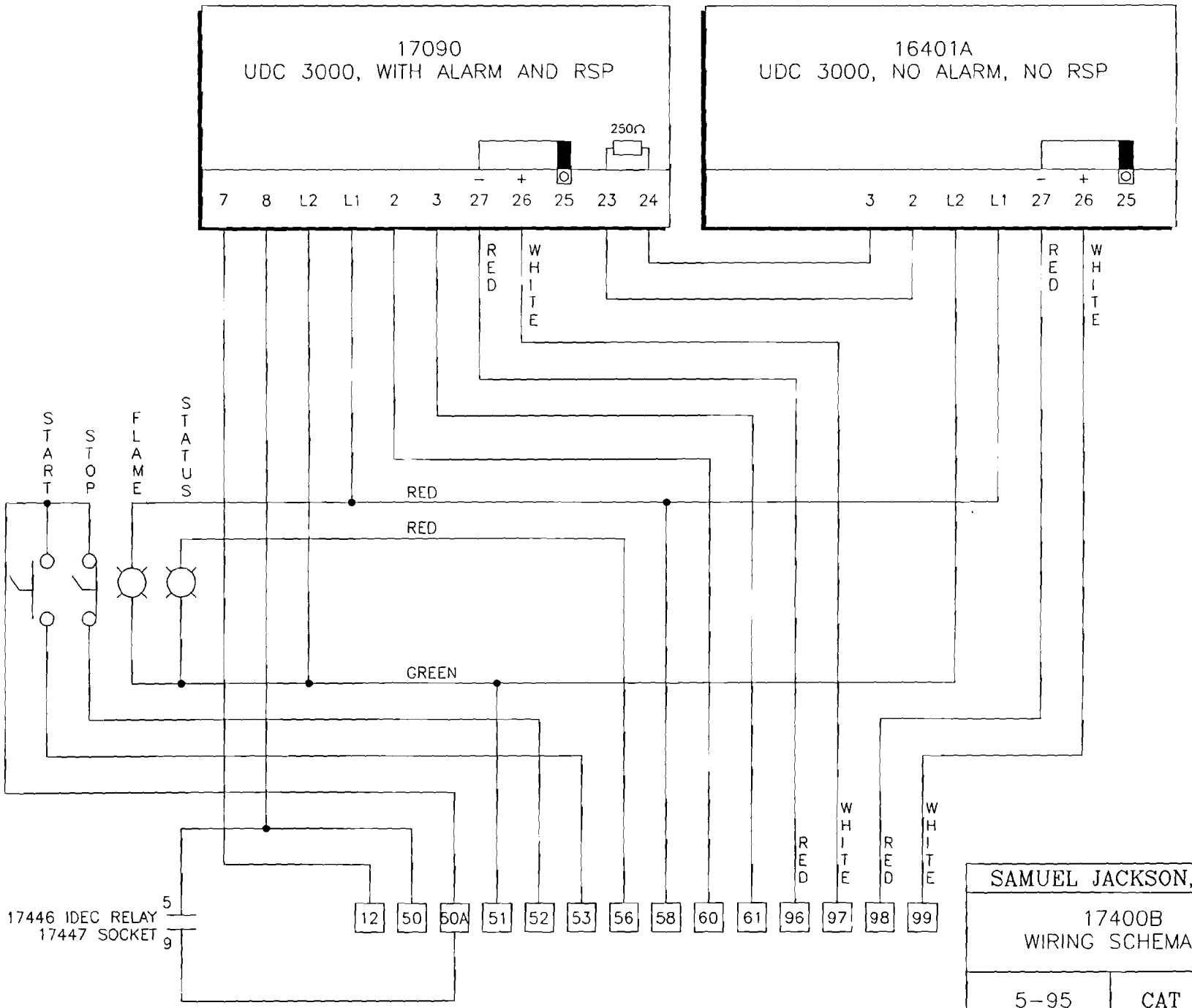

SAMUEL JACKSON, INC.

17400B
WIRING SCHEMATIC

5-95 | CAT 3970

TEST SEQUENCE

HG-8-1111 D
VERSION 2.0

STEP	ACTION TAKING PLACE	CONDITION FOR NEXT STEP
0	NONE -- START TEST PROGRAM	RESET
1	CHECK FAN RELAY OPERATION AND ADJUST AIR FLOW SWITCH. ADJUST AIR VANES, VP = .4" ADJUST AIR SCREEN SWITCH. **FAN ON AND OFF THIS STEP.**	RESET & 3 OFF, 5 OFF OR HOLD RESET
2	OBSERVE CONDITION OF INPUTS: 0002 RESET OFF 0003 HOLD ON TEST (IF FAN IS ON) 0004 START OFF TEST (IF FAN IS ON) 0005 AIR FLO SW OFF (ON IF FAN IS ON) 0006 GAS LP SW OFF LOCAL START SW WILL RELIEVE 0007 GAS HP SW ON (JUMPERED IF NOT APPLICABLE) 0008 GAS L TEMP ON (JUMPERED IF NOT APPLICABLE) 0009 HI TEMP LIM ON (JUMPERED IF NOT APPLICABLE) 0010 LOCAL HOLD ON 0011 LOCAL START OFF USE TO OPEN VALVE P2 0012 AIR SCR SW OFF OPTIONAL FOR PULL-THROUGH 0014 FLAME A OFF 0015 FLAME B OFF	RESET & 4,6,7,8,9,10,12, 14,15 AS SHOWN OR HOLD RESET
3	TEST UDC AND MOD MOTOR START: TO OPEN CENTER: TO HOLD STOP: TO CLOSE	0106 ON IN THIS STEP RESET
4	VALVE LEAK TEST ADJUST GAS LOW PRESS SWITCH START: OPENS P1 STOP: OPENS P2 **START FAN**	RESET AND AIR FLOW ON
5	GAS PURGE, P1 P2 OPEN	TIM 3 (5 SEC)
6	AIR PURGE	TIM 4 (15 SEC)
7	TEST IGN TRANS AND IGN LTS START: TURNS ON IGTB STOP: TURNS ON IGTA FLAME LTS MUST STAY OFF	RESET AND NO FLAME SIGNALS
8	TRIAL FOR IGNITION ADJUST SMALL COCK FOR LOW FIRE AND GOOD START 10 SEC WITHOUT FLA & FLB RESETS STEP & DISPLAY	TIM 5 (10 SEC) FLA & FLB STEPS TO 9
9	OPERATE BURNER	NOT(FLA OR FLB) OR STOP OR RESET STEPS TO 10
10	RESET STEP & DISPLAY	

TEST SEQUENCE EXPLANATION
HG-8-1111 C AND D

(FOR SOFTWARE VERSIONS 2.0 AND LATER)

PRELIMINARIES -- To test a new installation, first purge the gas supply pipe to fill it with gas and blow debris from it. Check the voltage of the electric power supply.

TO ENTER TEST SEQUENCE -- Press RESET button while turning local selector switch to "0" (STOP). Hold both in for 5 seconds. Watch the STATUS light for seconds count. While still pressing RESET button, turn selector switch to "1" (START). This puts you in Step 0 of the test sequence. The STATUS light will confirm this by blinking once per second. The presence of various inputs can be verified by observing the numbered LED's at the right end of the heater's PLC. INPUTS are at the bottom. OUTPUTS are at the top. The STEP NUMBER will be shown on the LCD digital display on the sequence panel SP.

STEP 0 -- After releasing RESET button, press it once to go to Step 1.

STEP 1 -- Fan must be OFF at this step. Confirm that inputs 3 and 5 are OFF. If 3 is ON, it means that the fan interlock relay is not working or has not been installed. This must be corrected. (The operation should be the same if a central PLC is used instead of a mechanical relay.) If input 5 is ON, it means that the air flow switch AF needs adjusting. Remove its cover and rotate the adjusting screw clockwise until input 5 goes OFF. To adjust it more precisely, disconnect the black tube from its low pressure port, and attach a sensitive manometer to the port with a T-fitting so you can suck on it and measure the vacuum applied. Adjust AF so it turns ON input 5 at about 0.3" (.75 cm) of water and turns OFF at 0.2" (.50 cm). Further adjustment may be necessary in actual operation if the conveyance of cotton slows down the air flow.

Now connect the manometer to the white and black tubes so it will measure the air velocity (differential) pressure normally applied to AF. Turn on the fan or fans so the air flow is similar to actual operation. The velocity pressure should be at about 0.4" (1.0 cm). If necessary, adjust this by moving the vanes which constrict the passage of air just ahead of the burner heads. They are just inside the two access doors. The ends of their adjusting links can be bolted in a series of holes which bring them closer together to increase velocity pressure VP or farther apart to reduce it. Make the adjustment the same on both sides. If VP is too low, the flame might be yellowish, and the air flow switch not so responsive. If VP is too high, the flame will burn with a roar at high outputs. On high air volume, pull-through systems where the velocity cannot be reduced to .4" with the shutters, burner operation will not be adversely affected.

The air screen switch AS is an option used to detect clogging of the air inlet screen where the heater is used on a pull-through drying system. It is located to the left of air flow switch AF. Using the manometer as on AF, adjust AS to operate at about 2" (5 cm) of vacuum.

Turn fan OFF, and press RESET button to proceed. (If it is inconvenient to turn fan OFF, press and hold the RESET button for 3 seconds to advance to STEP 2.)

STEP 2 -- Observe the condition of inputs outlined in TEST SEQUENCE. The operation of the remote and local start-stop switches and other inputs can be tested while observing the input LED's. If input 6 (gas low pressure switch) is on, turn local switch to START. This will open valve P2 to relieve the pressure between the valves. Before advancing to the next step, verify that the jumper between terminal 3 and terminal 12 is removed if the 16910 High Temperature Limit option is installed and that the jumper between terminal 3 and terminal 10 is removed if the LPG Low Temperature Switch option is installed. Press RESET to proceed. (If lights are not correct, advancing to Step 3 will be prohibited. If problem is understood and bypass is desired, press and hold RESET button for 3 seconds to advance.)

STEP 3 -- The digital temperature controller at the remote control station is now energized. Take this opportunity to check its configuration and tuning if it has not yet been configured (factory configuration and tuning is standard). In a few moments, after the digital controller has increased to full ouput, the local start-stop switch can be used to test the modulating motor. Turn to START to drive the motor to the open position. Center position will freeze it in position. Turn to STOP to drive it closed. Press RESET to proceed.

STEP 4 -- The local start-stop switch is now used to test for presence of gas, adjust its pressure, test for valve leakage and adjust the gas low pressure switch, if necessary. The START position opens pilot valve P1, admitting gas pressure to the cavity between P1 and P2. Slowly pressurize the cavity. Input 6 should turn on at about 1 psi. The final pressure should be between 3 and 4 psi. Leave the valves closed several minutes to see that the pressure does not leak off. This tells us that the downstream valves, P2 and SSOV2 (TCV valve on 1111C models), are not leaking. Now turn switch to the STOP position to bleed pressure from the cavity. Leave the valves closed several minutes to see that the pressure does not build up. This tells us that the upstream valves, P1 and safety shut-off valve SSOV1, are not leaking. The operating program will perform similar tests every time the heater is shut down. This is one reason electrical power must be supplied to the heater continuously, or at least for 15 minutes after each shutdown.

START FAN and press RESET to proceed to Step 5.

STEP 5 -- The heater's PLC will open valves P1 and P2 for 5 seconds to fill the pipe to the burner with gas. It will then automatically step to 6.

STEP 6 -- This step requires the fan to run for 15 seconds to purge the burner of any combustible gas. It then automatically steps to 7.

STEP 7 -- The local start-stop switch is now used to test the ignition transformers. Turning the switch to START turns on ignition transformer B IGTB. STOP turns on IGTA. If the gin is quiet, you can hear each spark. If there is difficulty, check the spark plug electrode gap at 1/16 to 1/8" (1.5 to 3 mm).
Hold each IGT on for two seconds while observing the flame lights on the sequence panel. If either flame light turns on, it means that there is electrical interference between the spark plug wires and the flame electrode wires. They should be run to the burner in separate conduits to avoid such interference. Since the operating program makes a similar test before each ignition, the burner will not operate until this problem is corrected.

Press RESET to proceed.

STEP 8 -- This step is the trial for ignition and only lasts 10 seconds. During this time, adjust the small gas cock between P1 and P2. Start with it closed, and slowly open it until both burners ignite. Adjust it for the lowest flame possible, yet high enough for dependable ignition. As soon as both burners ignite, the program steps to 9.

STEP 9 -- The burner should now operate normally, with TCV free to modulate the flame up to high output. Make sure that the temperature controller gives the proper 4-20 mA signal to control the modulating motor. The burner will stop when either STOP is operated, air flow fails, RESET is pressed, or on flame failure. To exit the test program, kill power or press RESET and turn the local STOP switch left momentarily. The STATUS light should stop blinking. To operate the burner normally, operate either START switch.

ALARMS/ERRORS EXPLANATION
HG-8-1111D

(FOR SOFTWARE VERSIONS 2.7 AND LATER)

PRELIMINARIES -- As explained in the Operation Notes, ERRORS will cause the burner to automatically shut down where ALARMS will permit the burner to continue operation but warn of conditions which may cause a shutdown if left unattended. In each case, a number will be displayed on the local panel inside the burner's control cabinet. This number will refer to either an ALARM or an ERROR. The number displayed will be the FIRST ALARM or ERROR to occur in a five minute time interval. This could mean that an ALARM code is displayed yet the burner may have shut down due to an ERROR.

EXAMPLE: The flame electrode for burner A is dirty. This prevents burner A from starting. ALARM code 36 (Burner A failed to ignite) is displayed for five minutes on the local panel and the status light flashes once every 2 seconds. While this is occurring, the burner is automatically restarting itself (three times max) attempting to light burner A. The burner shuts itself down on ERROR number 32 (Excessive flame failures) after 3 unsuccessful tries. This all occurs within a five minute period, therefore the display continues to show ALARM code 36 although the status light is flashing once every second and the burner is shut down due to an ERROR.

•ERROR 20

The air flow switch must be exercised periodically to insure its proper operation. If the burner and fans have run continuously for over 24 hours, the burner will NOT shut down due to this ERROR, however if the burner is turned off and an attempt is made to restart it without turning off the fans, it will not start and will display ERROR 20. The RESET button will NOT allow restart. The fans MUST be turned off and then back on to allow the burner to start again.

ALARM 21

This ALARM is an indication that a choke of the air flow is occurring. It is displayed when the air flow switch goes off and comes back on in less than 3 seconds.

ERROR 22

This ERROR occurs when the air flow is interrupted for more than 3 seconds. Verify proper air flow and adjust switch if necessary.

ERROR 23

This ERROR applies ONLY to pull through systems. The air inlet screen is choked. It requires cleaning. Failure to do so or bypass this can result in "hot streaking" of the burner, a major cause of cotton fires.

ERROR 24

This ERROR occurs when liquid propane is sensed in the line by the low temperature switch in the burner's gas pipe. It is an indication that there are problems with the vaporizer or possibly the high pressure regulator is leaking during a long shutdown period.

ERROR 25

The gas pressure is constantly monitored by the pressure switch in the lower cabinet. This ERROR is triggered when the pressure is below 1-1/2 psi when the gas valves are open. Check for a closed gas cock or ball valve in the gas line to the heater.

ERROR 26

This ERROR occurs when the gas pressure is excessively high. Check the reading on the gas gauge in the lower cabinet to see if the pressure is between 3-1/2 and 5 psi and adjust the gas regulator on the burner if required.

ERROR 27

This is a serious ERROR caused by a leaking valve upstream in the burner. The two upstream valves are the Safety Shutoff Valve (SSOV1) and the P1 pilot valve. Run the Test Program (see attached test program instructions) and observe the gas gauge during step 4 to determine the severity of the leak and consult the factory for service.

ERROR 28

This ERROR is caused by a downstream gas leak in the burner. The downstream gas valves on the HG-6-1111C are the Temperature Control Valve (TCV) with the Modutrol Motor on top of it and the P2 low fire valve. On the HG-8-1111D, the downstream valves are SSOV2 and P2. After running the Test Program to determine the severity of the leak, consult the factory for service recommendations.

ERROR 29

Each time the burner is turned off, the PLC spends the next 15 minutes performing an automatic leak check on the gas train and valves. These tests can be interrupted by simply turning off the power or restarting the burner before the 15 minutes is ended. The PLC demands however, that a leak test be performed at least once every 7 shutdowns. If each of the past 6 shutdowns have had the leak test interrupted, the PLC will not start until the RESET button is pressed (ERROR 29 will be displayed).

*ERROR 30

The PLC performs an automatic check of most of the heater's switches and safety devices each time the burner is started. One of these checks is the Gas Low Pressure switch (GLP). If this switch has been bridged, or is out of adjustment the PLC will not permit the burner to start until it is fixed. To check the GLP, run the Test Program to step 2 and then turn the local START-STOP selector switch to "1". This opens P2 valve. This evacuates the gas pressure cavity in the gas train and the gas pressure gauge should read 0 psi. Observe input light 6 on the PLC. This should be off. If not, check the switch's adjustment or it's wiring.

ERROR 31

The external electrical connection diagram indicates that a fan interlock contact be installed between terminals 50 and 50A on the 17400 (or 16400) remote control. The purpose of this is to interlock the power to the heater's control station with the motor starter(s) which drive the pull and/or push fans. (Sometimes the installing electrician substitutes an electrical interlock on the motor starter to accomplish the same purpose. This is OK.) As part of its routine checkout procedures, the PLC checks for this interlock to make sure that it has not been bridged or otherwise tampered with. If it has, it will not permit the burner to start and displays ERROR 31. Press RESET to clear this.

ERROR 32

While the burner is running, it counts the number of times either flame fails (either igniting or while running). When the total comes to 3, it shuts the burner down on ERROR 32. If any of the ALARM codes 33 through 37 are shown for this, it means that the failures took place within a 5 minute interval and the first failure is the one displayed (ie: "Burner B failed to ignite" might mean the spark plug needs to be cleaned on burner B.) Press RESET to clear this ERROR.

ALARM 33

This ALARM means that both burners failed to light. It is an indication that there may be air in the gas line, insufficient low fire gas, or turbulent air flow. If the burner is being operated above a push fan, air turbulence can prevent the burner from lighting. Verify that the air diffuser is installed between the fan and burner if a push fan is in use.

ALARM 34

This ALARM means that burner A failed to light. Check for a dirty spark plug and/or flame electrode. If these are OK check for sufficient low fire gas.

ALARM 35

This ALARM means that burner B failed to light. Check for a dirty spark plug and/or flame electrode. If these are OK check for sufficient low fire gas.

ALARM 36

This ALARM means that burner A failed while burning. Check for a dirty flame electrode. If it is OK check for sufficient low fire gas.

ALARM 37

This ALARM means that burner B failed while burning. Check for a dirty flame electrode. If it is OK check for sufficient low fire gas.

ERROR 38

This ERROR is normally caused by tampering with the Flame Relay (FLR). Check to see if the contacts of FLR are bridged or the relay jammed.

ERROR 39

This ERROR is caused by electrical interference between the spark plug wires and the flame electrode wires. They should be run in separate conduits. (As the spark plug wire carries in excess of 6000 Volts, also check to make sure that it is routed along the BOTTOM of the control cabinet and not the top where it can interfere with the operation of the PLC, counter, etc.).

ERROR 40

This ERROR means that the burner does not turn off in the time it is allowed to turn off in (12 seconds). It is a possible indication of a gas leak in the system. Consult the factory for service recommendations for this problem.

ALARM 41

When the Honeywell UDC-2000 High Temperature limit is used as a modulating High Temperature Limit, ALARM 41 indicates that modulation at the high limit is occurring. (Valid only for HG-6-1111C with software version 2.0 and 2.1 and UDC-2000 Limit Controller.)

ERROR 42

This ERROR will shut the burner down due to excessively high temperatures occurring before the mixpoint which the modulating control is unable to constrain.

ERROR 43

This ERROR is caused when an attempt is made to start the burner when no fan interlock relay is present. A fan interlock relay is supplied with the 17400 remote control to provide instant shutdown of the burner when the fans are stopped. The installing electrician is responsible for wiring the coil of this relay to the fan circuits.

ERROR 44

This error indicates that the air flow switch is ON while the fan interlock relay is OFF 10 minutes after shutdown. This normally means that the air flow switch is not functioning properly or has been jammed in the closed position.

* Indicates an ERROR condition that can be temporarily bypassed. To bypass the ERROR, perform the following steps. These steps will have to be performed in order to bypass the ERROR each time the heater is started until the condition is fixed. While the ALARM light is ON and the STATUS light is flashing:

- Turn the local START-STOP switch to the left (STOP) 3 times.
- Press the RESET button to clear the ERROR and attempt to restart the heater.

COMPONENT LABELS FOR HG-8-1111D

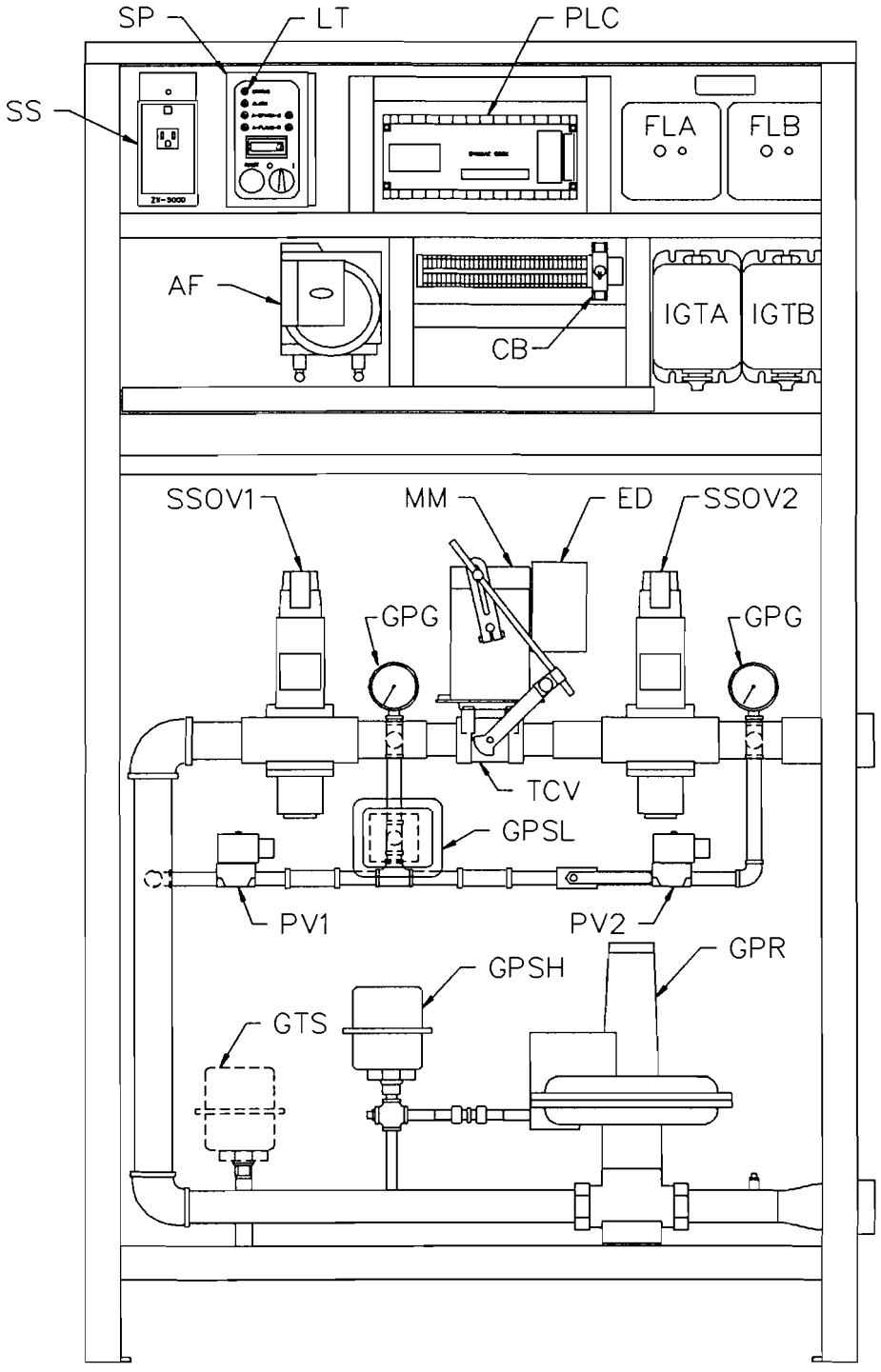

1111D-LB

COMPONENT LIST --- HG-8-1111D

SYMBOL	NAME PART NUMBER, MFR'S TYPE	LOCATION
AFS	AIR FLOW SWITCH 16188, PC-301	UPPER CABINET
AS	AIR SCREEN SWITCH (OPTIONAL) 16188, PC-301	UPPER CABINET
CB	CIRCUIT BREAKER 17427, NRAS1100F5AAA	UPPER CABINET
DTC	DIGITAL TEMPERATURE CONTROLLER 16401, DC3001-0-000-1-00	REMOTE
DTCH	16910 DIGITAL HIGH TEMP OPTION 17090, DC3002-0-010-1-00	REMOTE
ED	ELECTRONIC DRIVE FOR MM, 4-20MA 14845, CP-8391-716	LOWER CABINET
FE	FLAME ELECTRODE (2) 12399, FRS-2-6	BURNER
FLA FLB	FLAME RELAY (2) 16235, R7023B1003	UPPER CABINET
GPG	GAS PRESSURE GAGE (2) 11278, 9851933	LOWER CABINET
GPR	GAS PRESSURE REGULATOR, 1-1/4 16595, 121-8	LOWER CABINET
GPSH	GAS PRESSURE SWITCH (HIGH PRESS) 17595, SWITCH UNIT, PB-21A 17596, PRESSURE TRANSDUCER, RD20A11	LOWER CABINET
GPSL	GAS PRESSURE SWITCH (LOW PRESS) 16643, SWITCH UNIT, PB-41A 16645, PRESSURE TRANSDUCER, RD40A11	LOWER CABINET
GLTS	GAS LOW TEMPERATURE SWITCH 16647, SWITCH UNIT, PB-11A 16561, TEMPERATURE TRANSDUCER, KB10A1 (USED ONLY WITH PROPANE UNITS)	LOWER CABINET
IGP	IGNITER PLUG (2) 12398, I-64-1	BURNER
IGTA IGTB	IGNITION TRANSFORMER (2) 11172, 612-6A7	UPPER CABINET

MM	MODULATING MOTOR FOR TCV 14824, MP-2150-500-0-02 (FOR 60 HZ) 16614, MP5-2150-500-2-2 (FOR 50 HZ)	LOWER CABINET
PLC	PROGRAMMABLE LOGIC CONTROLLER 16708, C28K	UPPER CABINET
PV1 PV2	GAS PILOT VALVE (2) 17218, 8040G8	LOWER CABINET
SP	SEQUENCE PANEL, COMPLETE 17735	UPPER CABINET
SS	SURGE SUPPRESSOR 16191, ZX-5000	UPPER CABINET
SSOV1 SSOV2	SAFETY SHUT-OFF GAS VALVE, 1-1/2 17271, VALVE, VGG10.14040 17270, ACTUATOR, SKP10.11101	LOWER CABINET
TCV	TEMPERATURE CONTROL VALVE, 1-1/4 13947, 63-18207	LOWER CABINET

17400 DIGITAL TEMPERATURE CONTROL

(WITH 16910 MODULATING HIGH TEMPERATURE LIMIT)

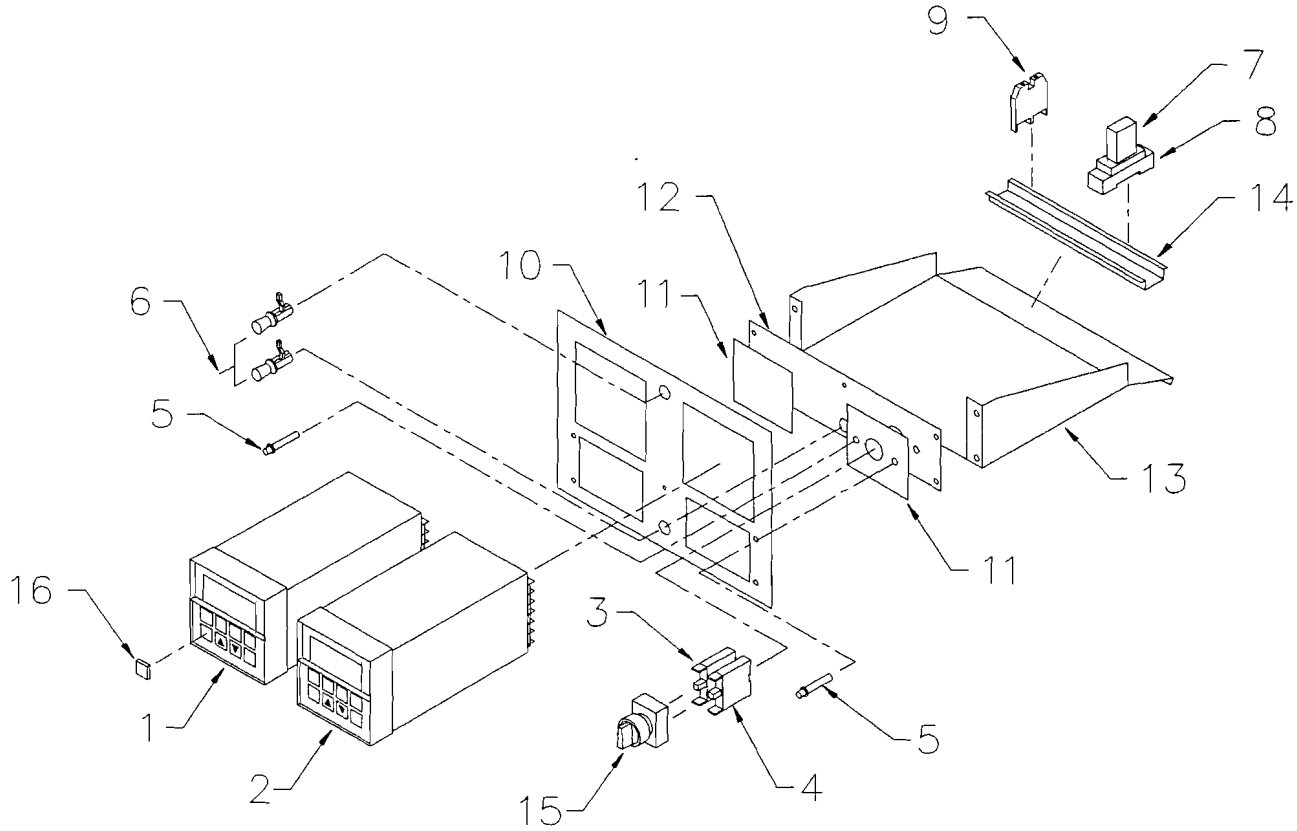

REF	PART NO.	QTY. USED	DESCRIPTION
1	16401	1	Digital Temperature Control, UDC 3000
2	17090	1	Digital Temperature Control, UDC 3000 with Alarm and RSP
3	14449	1	1 NC Contact
4	14448	1	1 NO Contact
5	14839	2	Red Indicator Light
6	13811	2	Latch, Adjustable Grip
7	17446	1	Fan Relay
8	17447	1	Socket for 17446
9	16176	13	Terminal Block
10	17104	1	Panel Plate
11	18729	1	Face Plate Decal
12	18723	1	Face Back Plate
13	18726	1	Chassis
14	17405	1	Din Track
15	14445	1	3-Position Selector Switch, Spring Return
16	17091	12	Button Cover

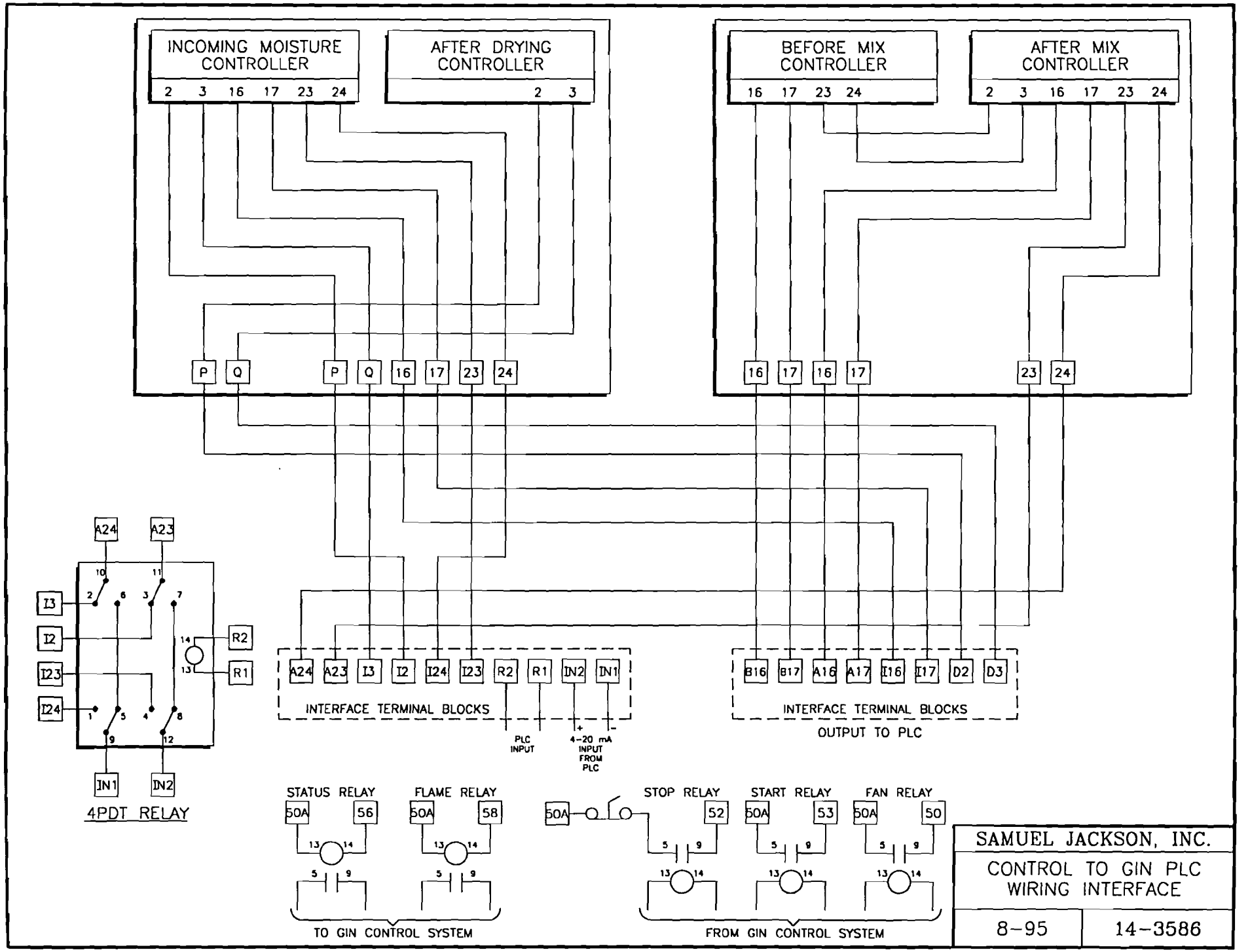
INCOMING MOISTURE CONTROLLER
2 3 16 17 23 24
AFTER DRYING CONTROLLER
2 3
BEFORE MIX CONTROLLER
16 17 23 24
AFTER MIX CONTROLLER
2 3 16 17 23 24
P Q P Q 16 17 23 24
16 17 16 17 23 24
A24 A23 I3 I2 I24 I23 R2 R1 IN2 IN1
INTERFACE TERMINAL BLOCKS
PLC INPUT
4-20 mA INPUT FROM PLC
B16 B17 A16 A17 I16 I17 D2 D3
INTERFACE TERMINAL BLOCKS
OUTPUT TO PLC
A24 A23 I3 I2 I23 I24 R2 R1 IN1 IN2
4PDT RELAY
STATUS RELAY
50A 56
FLAME RELAY
50A 58
TO GIN CONTROL SYSTEM
50A
STOP RELAY
52
START RELAY
50A 53
FAN RELAY
50A 50
FROM GIN CONTROL SYSTEM
SAMUEL JACKSON, INC.
CONTROL TO GIN PLC WIRING INTERFACE
8-95
14-3586

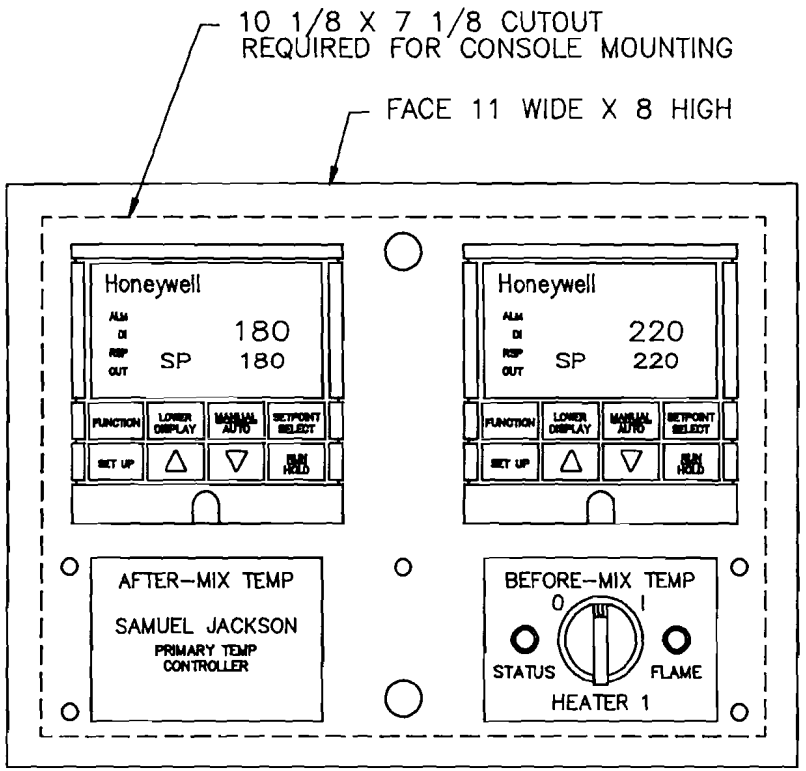

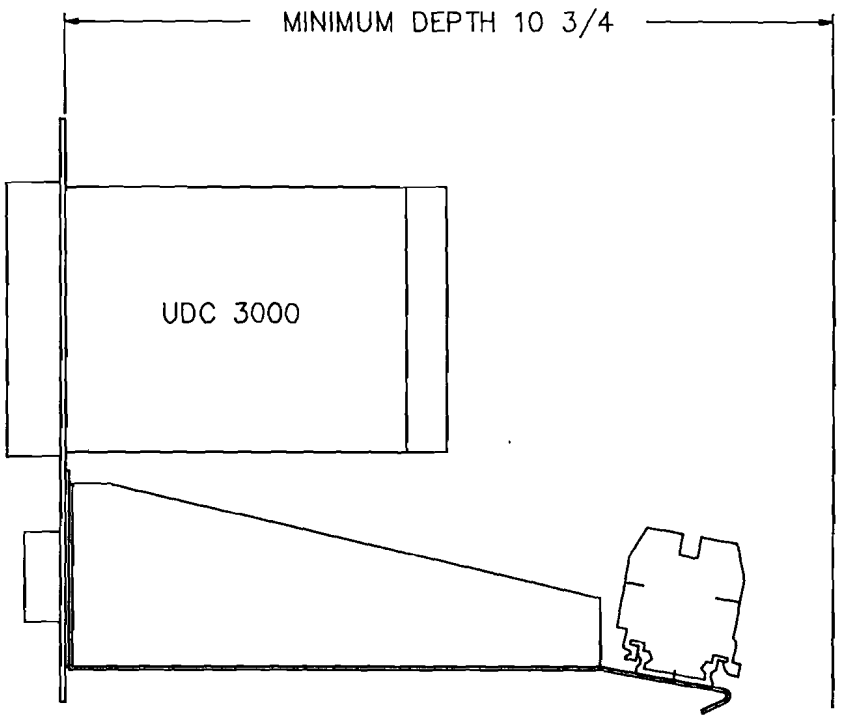

SAMUEL JACKSON, INC.	
17400B TEMPERATURE CONTROL DIMENSION SHEET	3960A 3-94

13480A BURNER HEAD ASSEMBLY

3131A
8-92

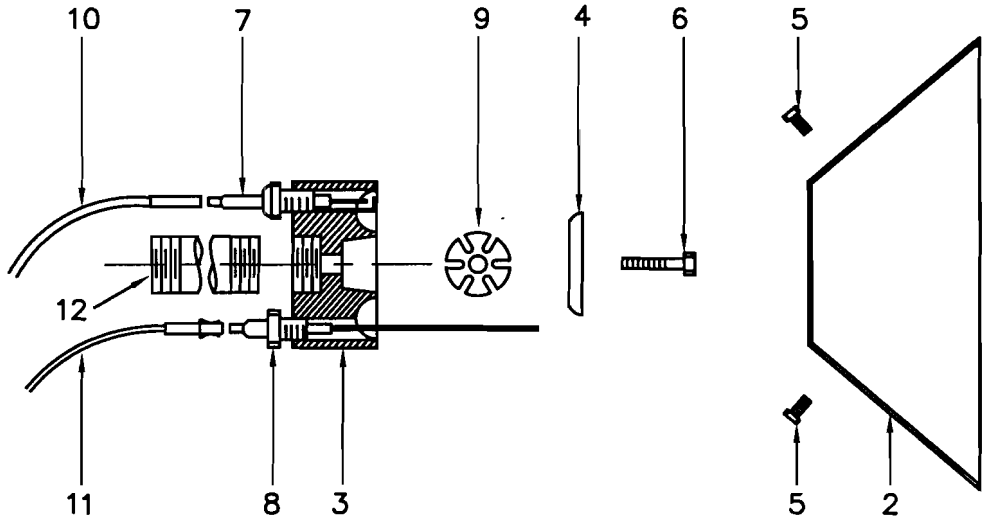

TOP VIEW

REF	QUANTITY	PART NO.	DESCRIPTION		
2	1	13482	BURNER CONE (FOR NATURAL GAS; USE 12975B FOR LPG)		
3	1	14620	BURNER BODY (FOR LPG; USE 18000 FOR GAS)		
4	1	12985B	CONTOURED DISC		
5	4	15724	5/16 X 1/2 HX HD SS CAP SCREW		
6	1	15767	3/8 X 1 3/4 HX HD SS CAP SCREW		
7	1	12398	SPARK PLUG, I-64-1		
8	1	12399	FLAME ELECTRODE, FRS-2-6		
9	1		BURNER ORIFICE DISC:		
			SLOT	THICK	FLOW AREA
		18031	.080	.048	15
		18032	.114	.048	21
		18033	.103	.075	30
		18034	.149	.075	43
		18035	.216	.075	63
		18036	.179	.135	94
		18037	.286	.135	149
			PARTS NOT INCLUDED IN 13480 BURNER HEAD:		
10	1	11159	SPARK PLUG WIRE		
11	1	11158	FLAME ELECTRODE WIRE		
12	1	15189	1 1/4 X 4 BLACK PIPE NIPPLE		

GAS PIPING

The size of the pipe supplying gas to heaters and other appliances should be large enough to prevent excessive pressure losses when all of them are in use. See following Table of *RECOMMENDED MINIMUM PIPE SIZES* for heater capacities, pipe lengths, and pressures.

Where LPG (Liquefied Petroleum Gas, Propane, Butane) is used as fuel, see the following Drawing *LIQUEFIED PETROLEUM GAS TANK INSTALLATION FOR HUMIDAIRE UNITS AND DRYING HEATERS* for recommended practices.

Emergency shut-off valves should be provided to permit turning off the fuel in an emergency. They should be located so that they are accessible in an emergency situation.

IRI (Industrial Risk Insurers) and some state and local authorities require venting the gas regulator and normally open vent valve.

NFPA (National Fire Protection Association) 86* states:

> 3-3.4.3.2 Regulators shall be vented to a safe location, where vented gas cannot re-enter the building without extreme dilution. The terminating end shall be protected against water entry and bug-screened. Vent pipe shall be of adequate size so as to not lengthen response time.
>
> 3-3.4.3.3 Vent lines from multiple regulators, where manifolded together, shall be piped in such a manner that diaphragm rupture of one will not backload the others.
>
> 3-3.4.3.4 Vents from gas pressure switches, but from no other devices, may be vented into the regulator lines provided that switch or regulator diaphragm failure will not backload the regulator.

* Reprinted with permission from NFPA 86-1985, Standard for Ovens and Furnaces, copyright © 1985, National Fire Protection Association, Quincy, Mass. 02269. This reprint of material is not the complete and official position of the NFPA on the referenced subject which is represented only by the standard in its entirety.

TOTAL HEATER CAPACITY MILLION BTU/HR	PIPE LENGTH FEET	RECOMMENDED MINIMUM PIPE SIZES				
		PRESSURE AT SERVICE REGULATOR OR VAPORIZER OUTLET, PSIG				
		NATURAL GAS			PROPANE *	
		6	10	15	10	15
2	100	1-1/4	1	3/4	3/4	3/4
	200	1-1/4	1	1	3/4	3/4
	500	1-1/2	1-1/4	1	1	3/4
4	100	1-1/2	1-1/4	1	3/4	3/4
	200	2	1-1/2	1-1/4	1	1
	500	2	1-1/2	1-1/4	1-1/4	1-1/4
8	100	2	1-1/2	1-1/4	1-1/4	1
	200	2-1/2	2	1-1/2	1-1/4	1-1/4
	500	3	2	2	1-1/2	1-1/2
16	100	3	2	1-1/2	1-1/2	1-1/4
	200	3	2-1/2	2	2	1-1/2
	500	4	2-1/2	2-1/2	2-1/2	2
24	100	3	2-1/2	2	2	1-1/2
	200	4	3	2-1/2	2-1/2	2
	500	5	3	2-1/2	2-1/2	2-1/2

* OR BUTANE

FILE: 14-1899

PIPE SIZES ARE NOMINAL DIAMETERS, SCHEDULE 40, AND ARE BASED ON 5 PSIG BEING REQUIRED AT INLETS OF COMBUSTION REGULATORS.

LIQUEFIED PETROLEUM GAS TANK INSTALLATION FOR HUMIDAIRE UNITS AND DRYING HEATERS

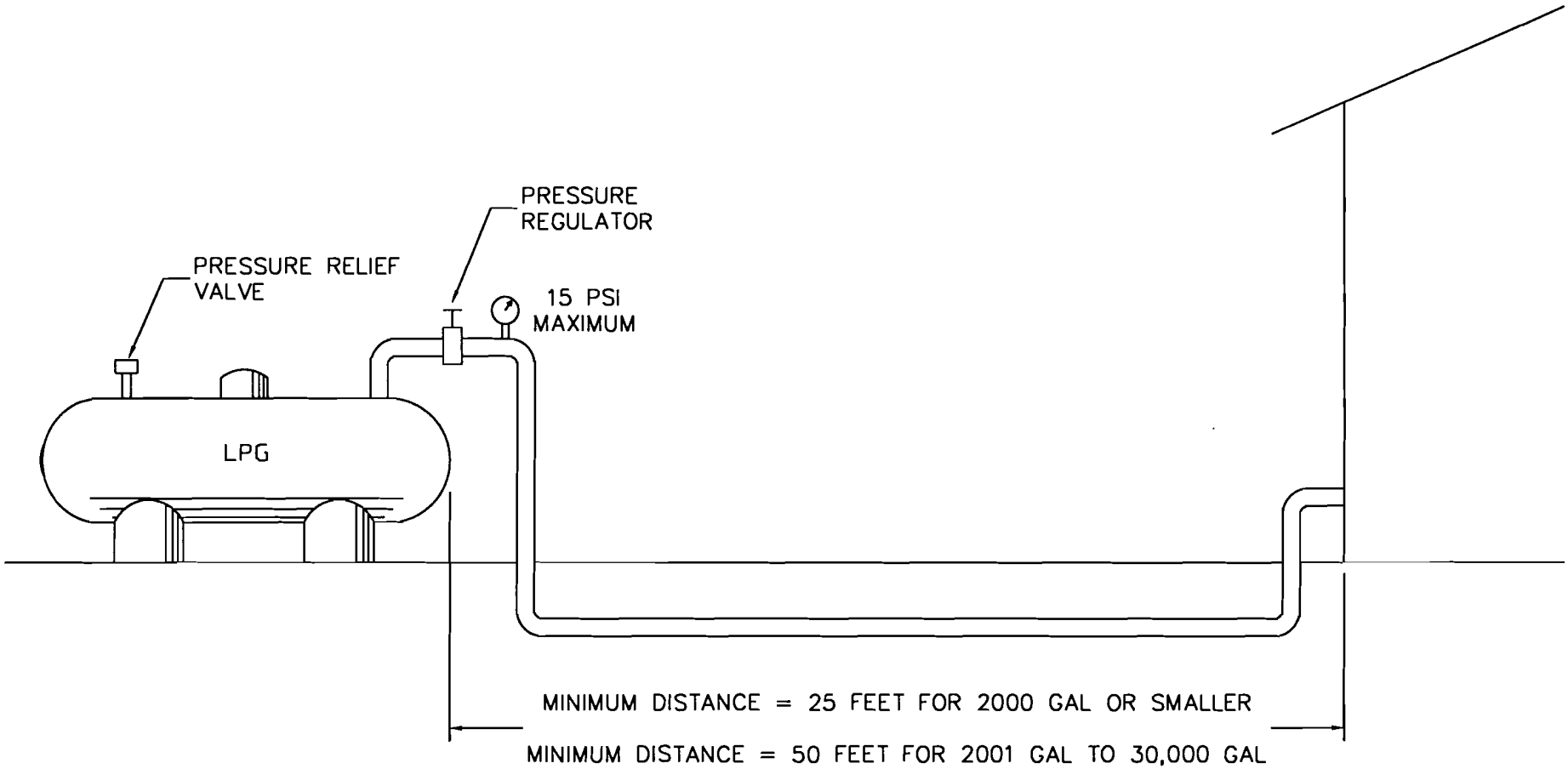

For LPG installations, the tank should be at least 1200 Gals. (US) to provide adequate surface area to absorb heat of vaporization from the atmosphere so that a vaporizer will not be necessary. To be compatible with the quantity of LPG recieved in each delievery, a larger tank may be necessary. A battery of small tanks of the desired total capocity has more heat–absorbing area than one large tank.

Whether or not a vaporizer is used, make sure that a regulator reduces the pressure to 15 psi (1 bar) BEFORE the pipe goes underground. Otherwise, reliquefication will take place in the cool earth and cause MUCH trouble. If the gas line in your building feels extremely cold during operation, liquid is in the line and the situation should be corrected IMMEADIATELY.

14–3566

ASSEMBLY INSTRUCTIONS FOR 80067 SUPPORT AND SCREEN ASSEMBLY FOR HG-16 GAS-FIRED HEATER

3361
8-95

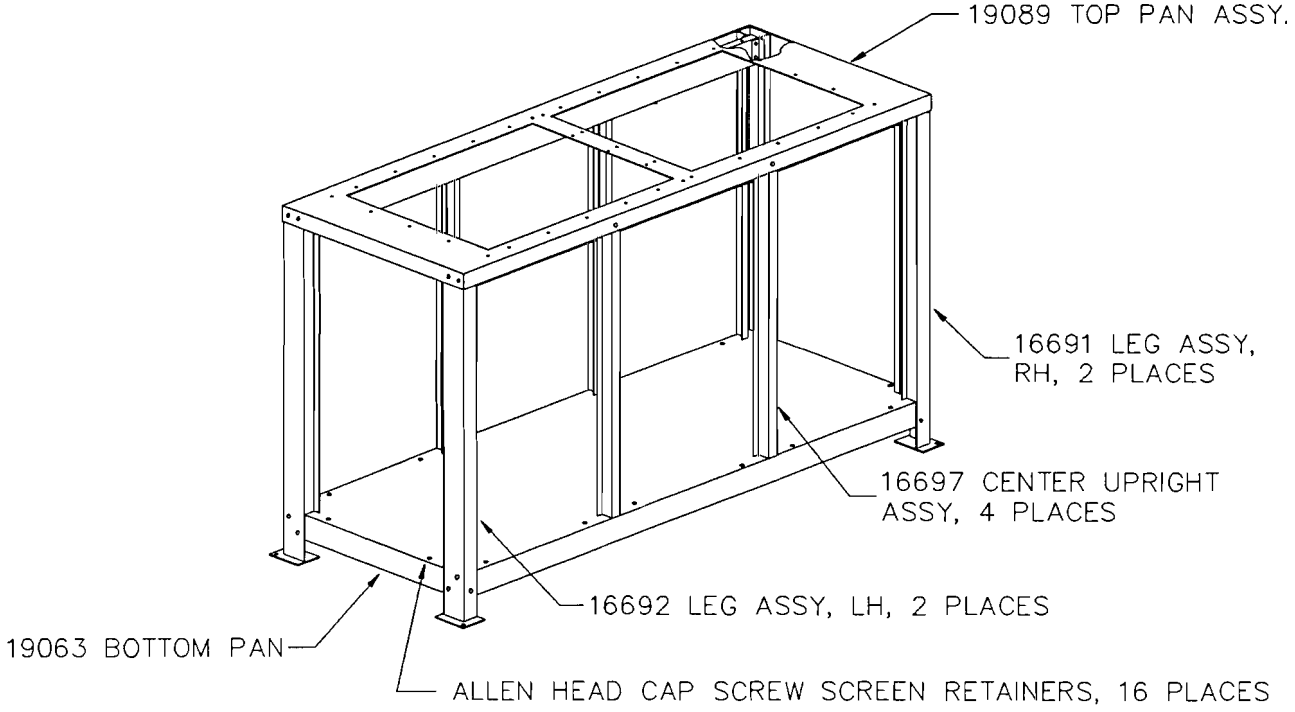

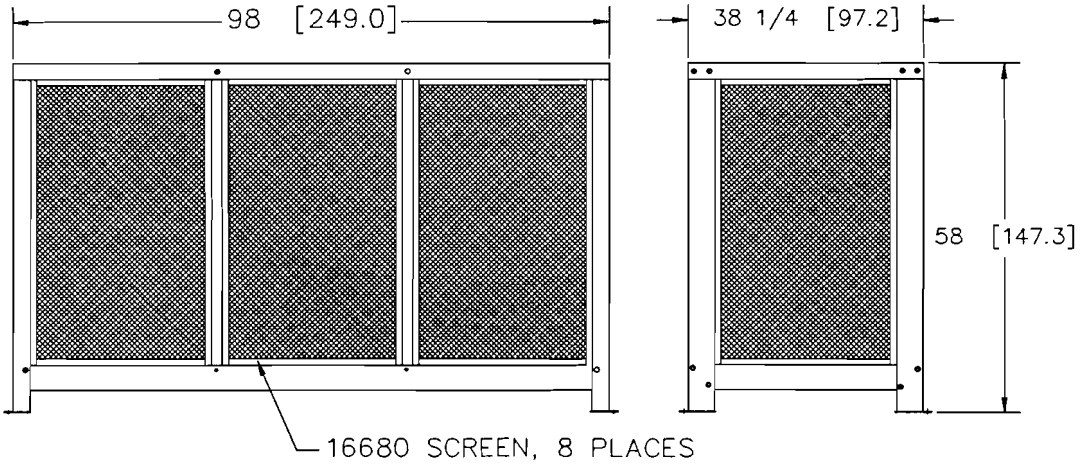

DIMENSIONS IN INCHES AND [CENTIMETERS]