HU-80-1145 "ZEPHYR" HUMIDAIRE UNIT
EXTERNAL ELECTRICAL CONNECTIONS

CA15505B
7-09

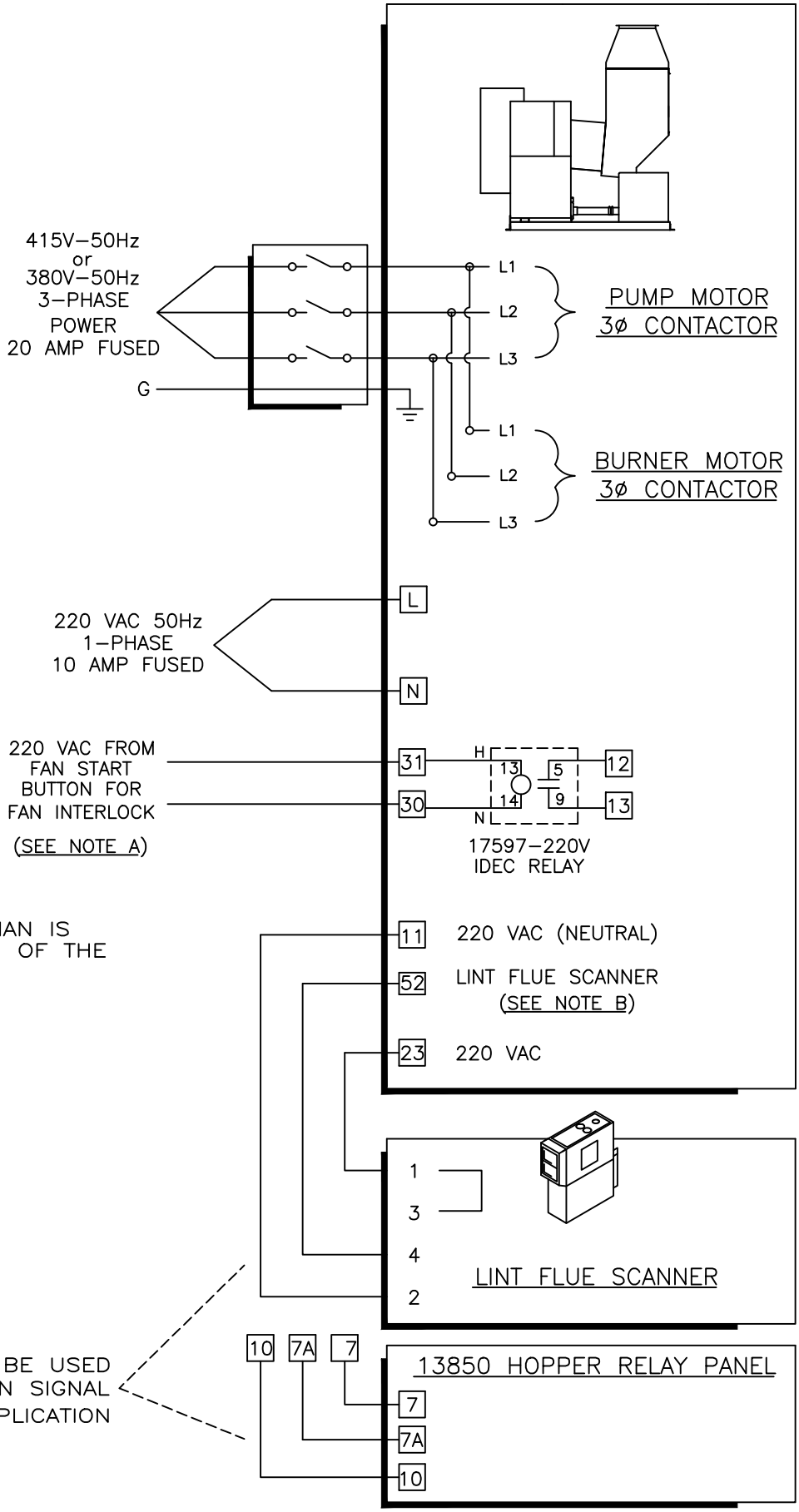

NOTE A: INSTALLING ELECTRICIAN IS RESPONSIBLE FOR CONNECTION OF THE NORMALLY OPEN INTERLOCK TO THE MOIST AIR FAN.

NOTE B: REMOVE JUMPER BETWEEN 23 & 52 BEFORE WIRING IN LINT FLUE SCANNER OR CONDITIONING HOPPER RELAY PANEL.

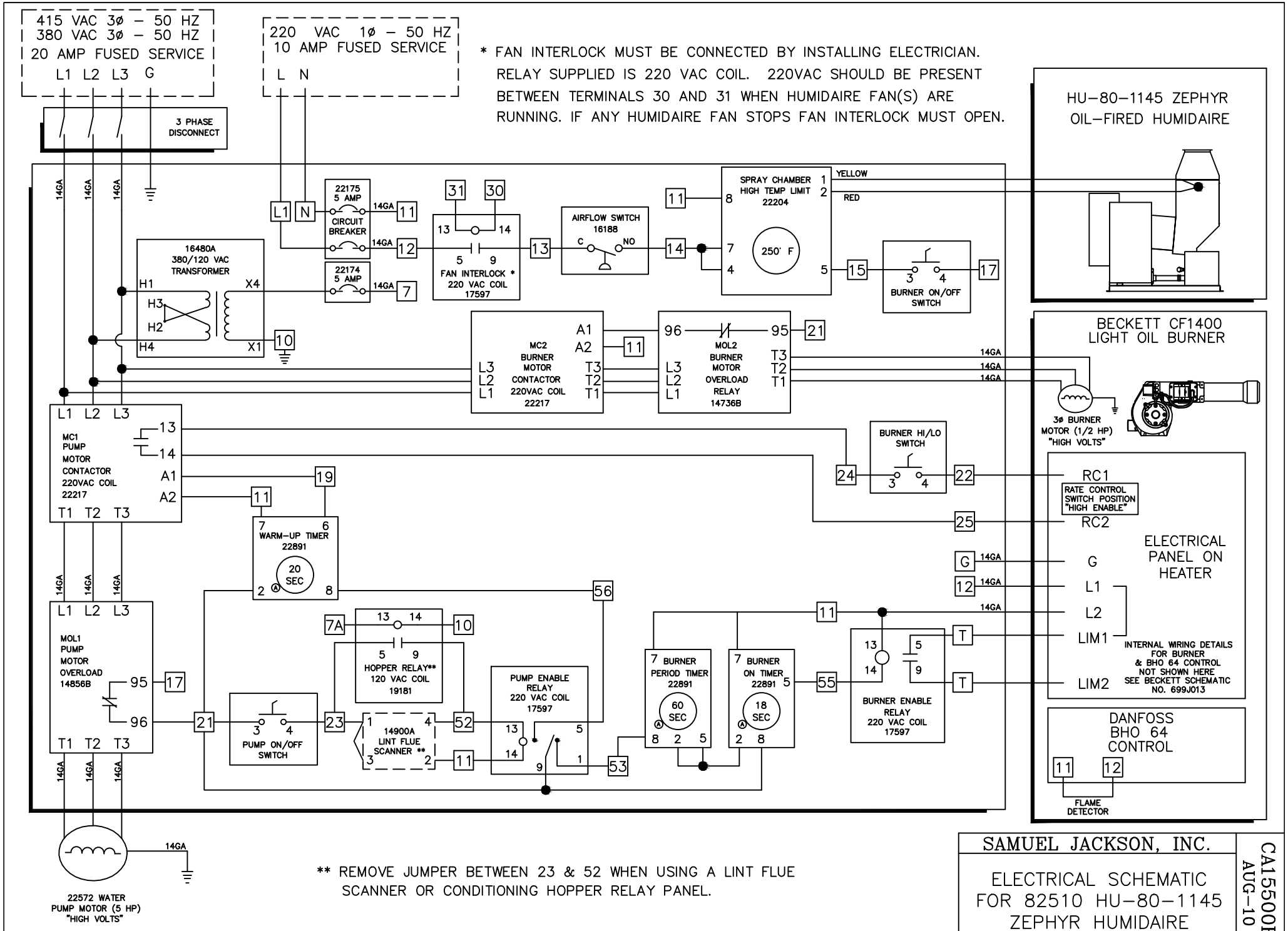
415 VAC 3ø – 50 HZ
380 VAC 3ø – 50 HZ
20 AMP FUSED SERVICE
L1 L2 L3 G
3 PHASE DISCONNECT
220 VAC 1ø – 50 HZ
10 AMP FUSED SERVICE
L N
* FAN INTERLOCK MUST BE CONNECTED BY INSTALLING ELECTRICIAN. RELAY SUPPLIED IS 220 VAC COIL. 220VAC SHOULD BE PRESENT BETWEEN TERMINALS 30 AND 31 WHEN HUMIDAIRE FAN(S) ARE RUNNING. IF ANY HUMIDAIRE FAN STOPS FAN INTERLOCK MUST OPEN.
HU–80–1145 ZEPHYR OIL–FIRED HUMIDAIRE
22175 5 AMP CIRCUIT BREAKER
22174 5 AMP
16480A 380/120 VAC TRANSFORMER
H1 H2 H3 H4 X1 X4
FAN INTERLOCK * 220 VAC COIL 17597
AIRFLOW SWITCH 16188
C NO
SPRAY CHAMBER HIGH TEMP LIMIT 22204
250° F
YELLOW
RED
BURNER ON/OFF SWITCH
MC2 BURNER MOTOR CONTACTOR 220VAC COIL 22217
MOL2 BURNER MOTOR OVERLOAD RELAY 14736B
BECKETT CF1400 LIGHT OIL BURNER
3ø BURNER MOTOR (1/2 HP) "HIGH VOLTS"
MC1 PUMP MOTOR CONTACTOR 220VAC COIL 22217
BURNER HI/LO SWITCH
WARM–UP TIMER 22891
20 SEC
RC1
RATE CONTROL SWITCH POSITION "HIGH ENABLE"
RC2
G
L1
L2
LIM1
LIM2
ELECTRICAL PANEL ON HEATER
INTERNAL WIRING DETAILS FOR BURNER & BHO 64 CONTROL NOT SHOWN HERE SEE BECKETT SCHEMATIC NO. 699J013
MOL1 PUMP MOTOR OVERLOAD 14856B
HOPPER RELAY** 120 VAC COIL 19181
PUMP ENABLE RELAY 220 VAC COIL 17597
BURNER PERIOD TIMER 22891
60 SEC
BURNER ON TIMER 22891
18 SEC
BURNER ENABLE RELAY 220 VAC COIL 17597
PUMP ON/OFF SWITCH
14900A LINT FLUE SCANNER **
DANFOSS BHO 64 CONTROL
FLAME DETECTOR
22572 WATER PUMP MOTOR (5 HP) "HIGH VOLTS"
** REMOVE JUMPER BETWEEN 23 & 52 WHEN USING A LINT FLUE SCANNER OR CONDITIONING HOPPER RELAY PANEL.
SAMUEL JACKSON, INC.
ELECTRICAL SCHEMATIC FOR 82510 HU–80–1145 ZEPHYR HUMIDAIRE
CA15500E
AUG–10

ELECTRICAL SCHEMATIC
13850 RELAY PANEL
FOR JACKSON CONDITIONING HOPPERS

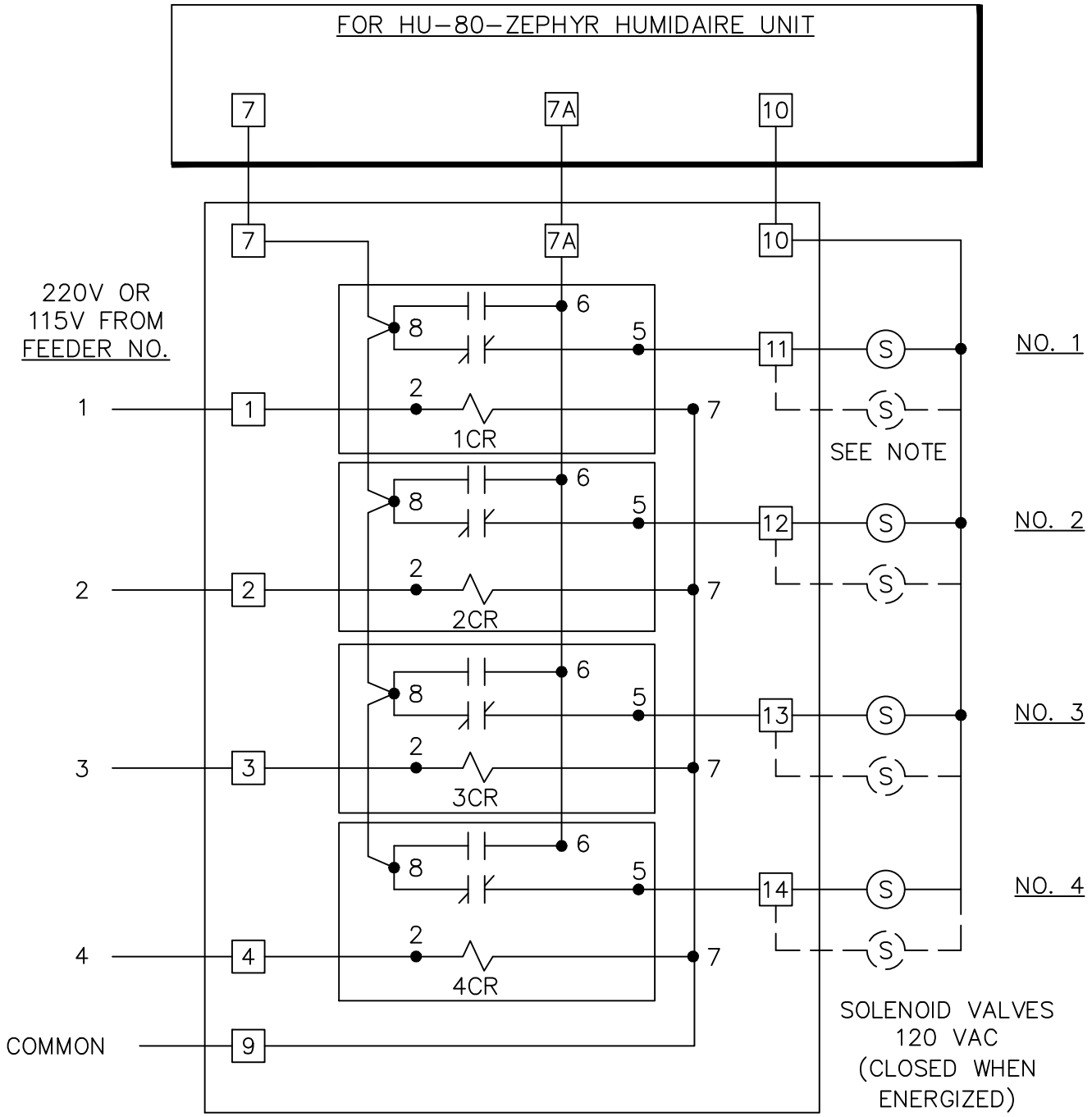

13850 RELAY PANEL
USE 13146 RELAYS, 120 VAC
OR
13864 RELAYS, 220 VAC

SOLENOID VALVE COILS ARE ALWAYS
120 VAC. THEIR POWER COMES FROM
TERMINAL 7 OF THE HUMIDAIRE UNIT

NOTE: IF DOUBLE AIR ENTRY,
TWO SOLENOIDS ARE USED