EXTERNAL ELECTRICAL CONNECTIONS HO-7-1237 AND HO-4-1234 OIL-FIRED HEATERS WITH 20000 REMOTE CONTROL

CA13332
8-99

NOTE: RUN POWER WIRES AND SENSITIVE WIRES IN SEPARATE CONDUITS.

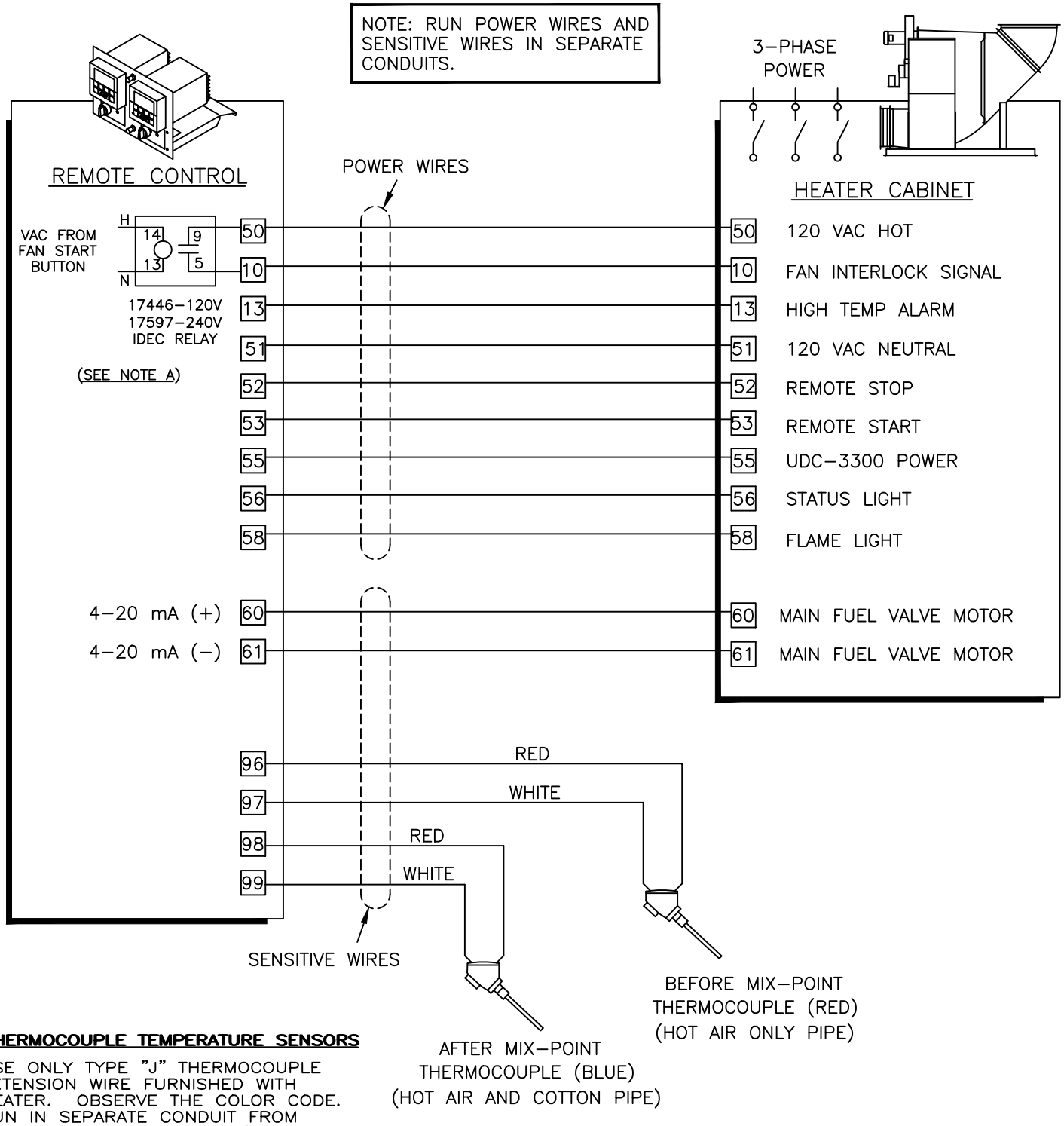

THERMOCOUPLE TEMPERATURE SENSORS

USE ONLY TYPE "J" THERMOCOUPLE EXTENSION WIRE FURNISHED WITH HEATER. OBSERVE THE COLOR CODE. RUN IN SEPARATE CONDUIT FROM POWER WIRES. SEVERAL T/C EXT. WIRES MAY BE RUN IN THE SAME CONDUIT.

NOTE A: INSTALLING ELECTRICIAN IS RESPONSIBLE FOR CONNECTION OF A NORMALLY OPEN **INTERLOCK** (FURNISHED) TO THE HEATER FAN.

REFER TO DIAGRAM CA13333 FOR EXTERNAL ELECTRICAL CONNECTIONS FOR OPTIONAL 20050 DIAGNOSTIC MODULE AND HOT BOX TRASH GATE POSITION SENSOR.

REMOTE CONTROL REQUIRES A RECTANGULAR MOUNTING CUTOUT 10 1/8 WIDE X 7 1/8 HIGH.

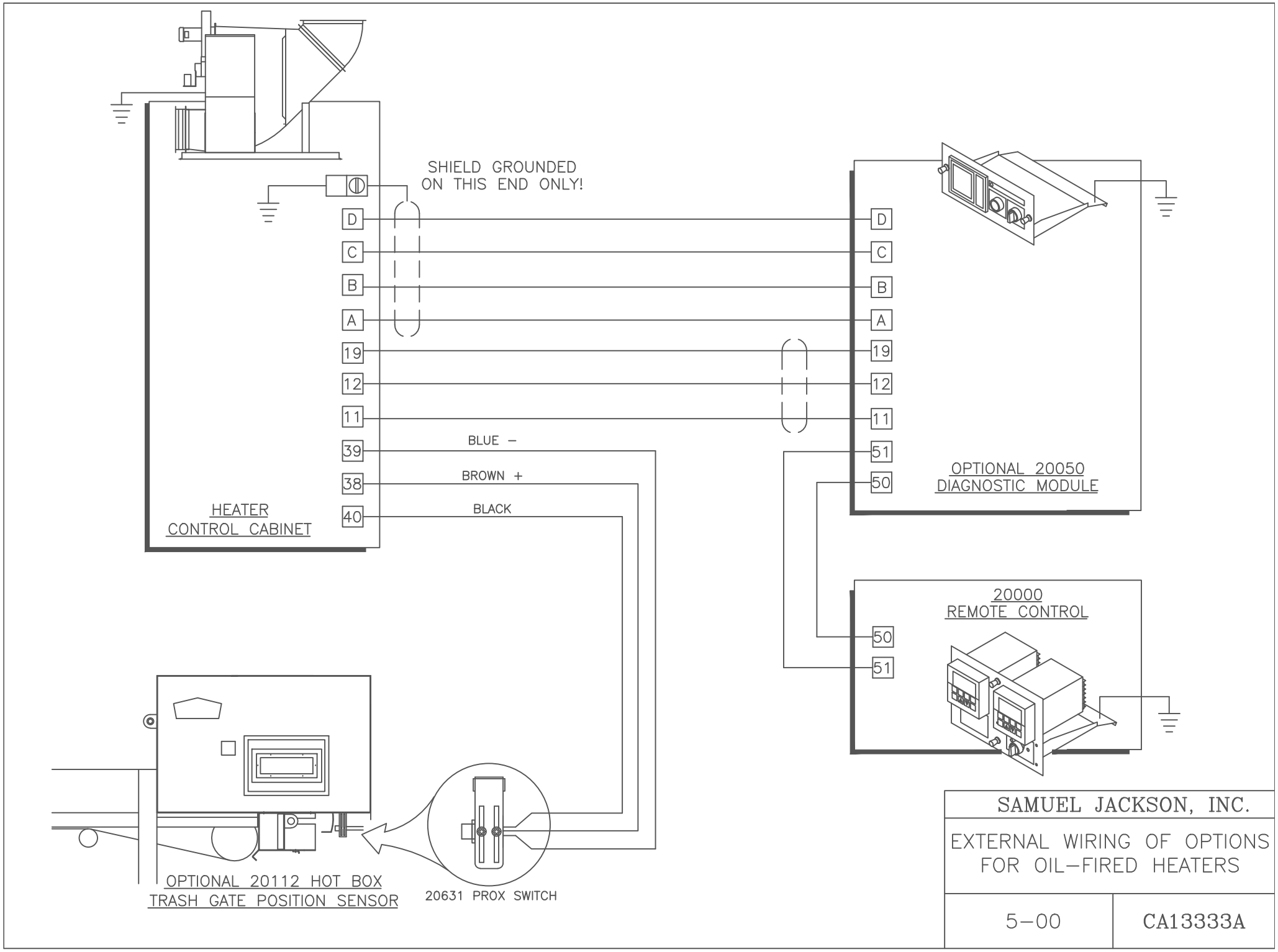
SHIELD GROUNDED
ON THIS END ONLY!
D
C
B
A
19
12
11
39
38
40
BLUE –
BROWN +
BLACK
HEATER
CONTROL CABINET
OPTIONAL 20050
DIAGNOSTIC MODULE
51
50
20000
REMOTE CONTROL
OPTIONAL 20112 HOT BOX
TRASH GATE POSITION SENSOR
20631 PROX SWITCH
SAMUEL JACKSON, INC.
EXTERNAL WIRING OF OPTIONS
FOR OIL–FIRED HEATERS
5–00
CA13333A

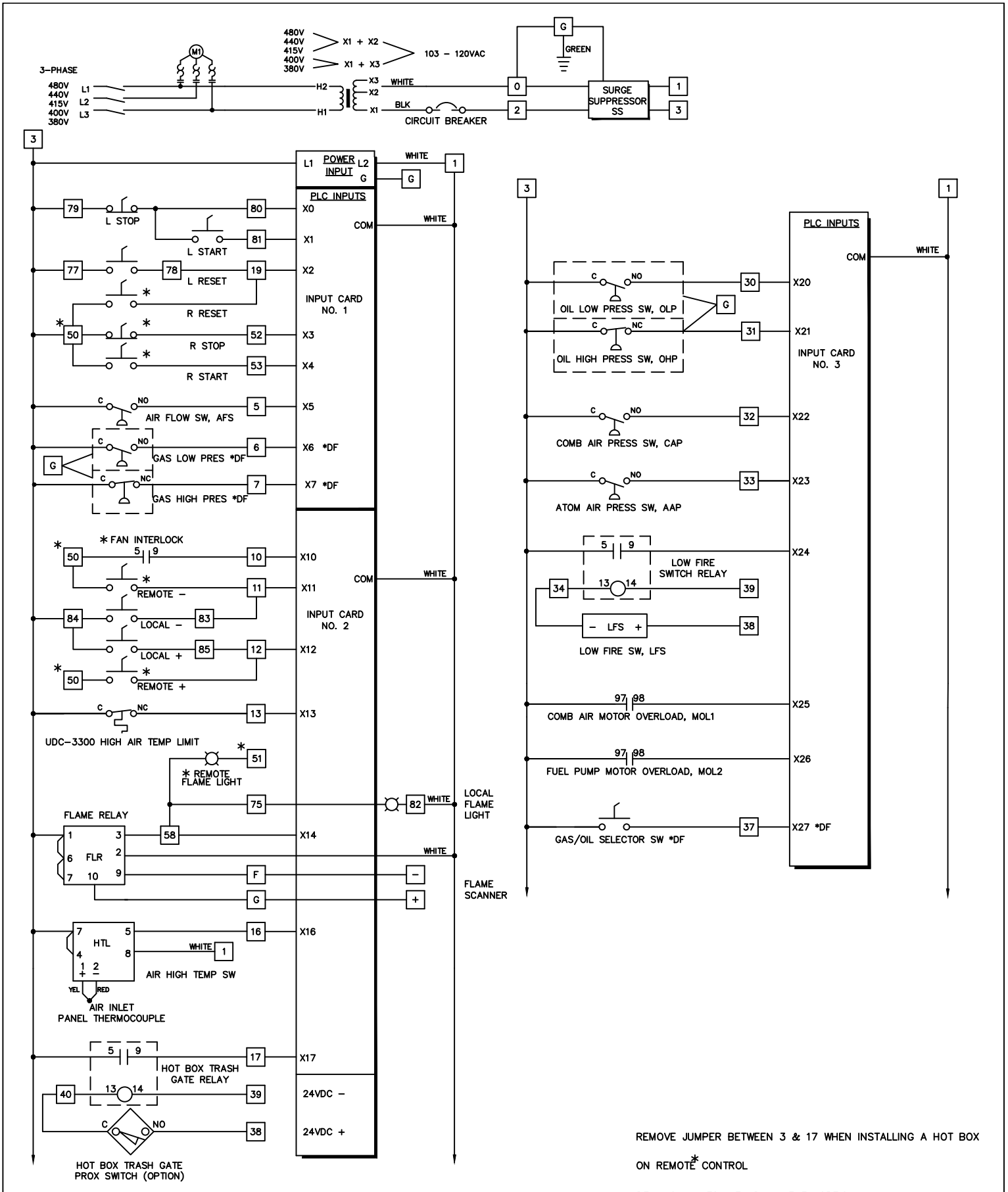

PART NO. 20619 COMPLETE PLC

REMOVE JUMPER BETWEEN 3 & 17 WHEN INSTALLING A HOT BOX ON REMOTE * CONTROL

*DF - ON UNITS WITH DUAL-FUEL OPTION

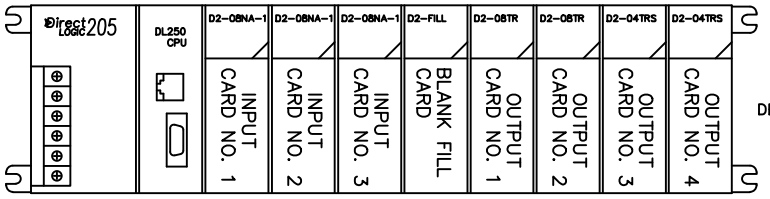

DECAL#. 10-20620B

SAMUEL JACKSON, INC.

ELECTRICAL SCHEMATIC
WITH PLC INPUTS
HO-7-1237 & HO-4-1234
OIL-FIRED HEATERS

CA13334C
6-06

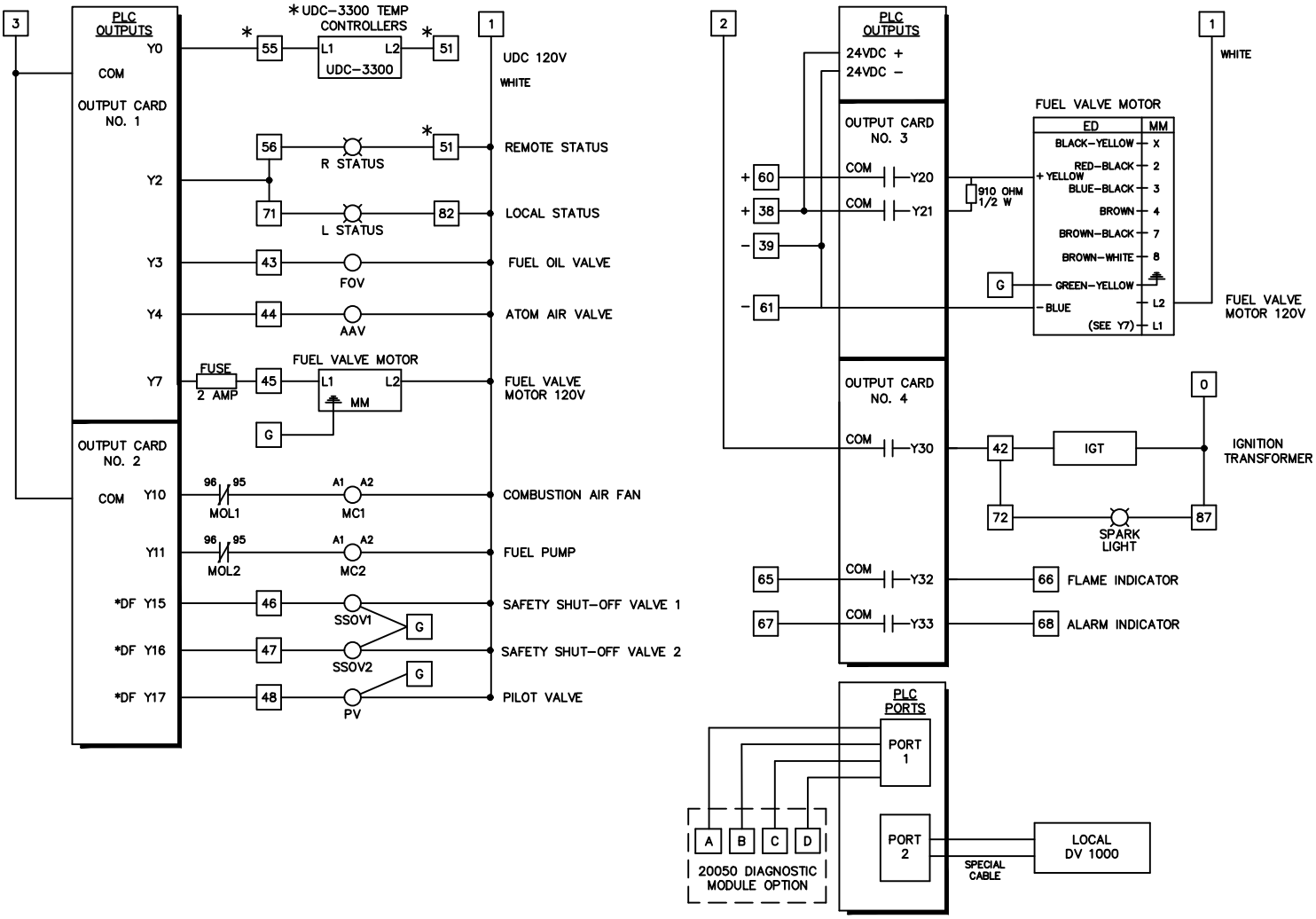

PART NO. 20619 COMPLETE PLC

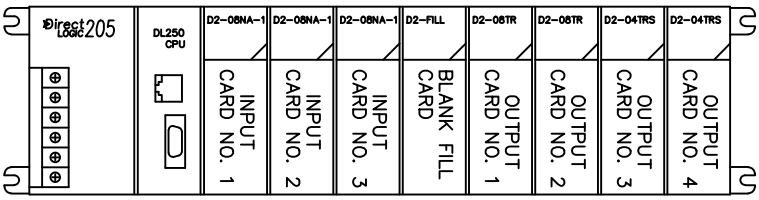

*ON REMOTE CONTROL

*DF – ON UNITS WITH DUAL FUEL OPTION

DECAL NO. 10-20621A

SAMUEL JACKSON, INC.

ELECTRICAL SCHEMATIC
WITH PLC OUTPUTS
HO-7-1237 & HO-4-1234
OIL-FIRED HEATERS

CA13335B
4-03

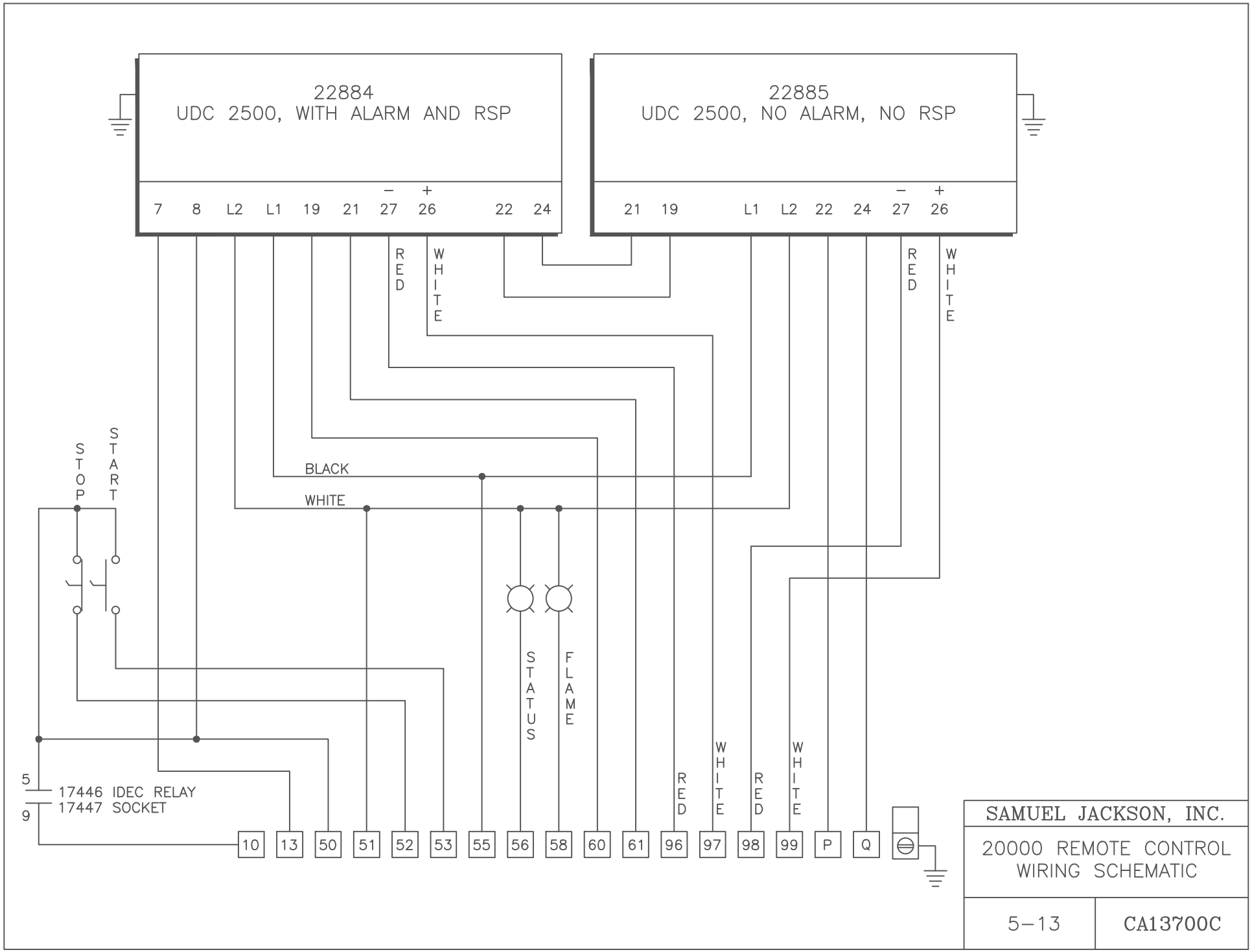
22884
UDC 2500, WITH ALARM AND RSP
7 8 L2 L1 19 21 27 26 22 24
22885
UDC 2500, NO ALARM, NO RSP
21 19 L1 L2 22 24 27 26
RED
WHITE
RED
WHITE
STOP
START
BLACK
WHITE
STATUS
FLAME
RED
WHITE
RED
WHITE
5
9
17446 IDEC RELAY
17447 SOCKET
10 13 50 51 52 53 55 56 58 60 61 96 97 98 99 P Q
SAMUEL JACKSON, INC.
20000 REMOTE CONTROL
WIRING SCHEMATIC
5-13
CA13700C